ClearWater Tech, LLC

Corona Discharge Ozone Generators

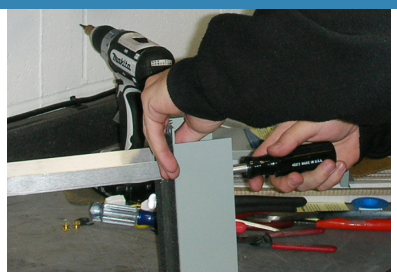

Service & Maintenance Binder

ClearWater Tech, LLC
Ozone Systems for Water and Air Purification
800-262-0203 • 805-549-9724
850 Capitolio Way, San Luis Obispo, CA 93401 • sales@cwtozone.com • www.cwtozone.com

Service Tool Kit

From ClearWater Tech, LLC.

ClearWater Tech, LLC has built all systems to provide years of reliable service with minimum maintenance. Some preventative maintenance is critical for the ozone systems' longevity and efficiency.

We have designed a specialty tool kit to aid our customers in these annual maintenance procedures required and outlined in the ClearWater Tech installation and operation manual.

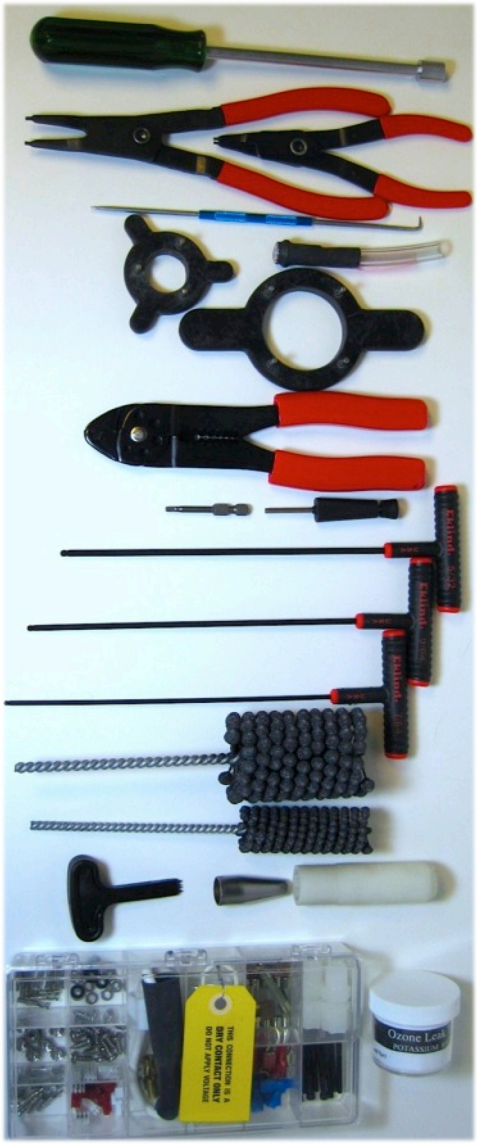

Service Tool Kit - #STK10

- Long body nut driver, 11/32" - #ST25
- Dryer chamber retaining ring pliers, large - #ST30
- Dryer chamber retaining ring pliers, small - #ST31
- O-ring pick removal tool - #ST35
- High voltage test probe - #ST40
- 2" end cap removal tool - #ST50
- 1" end cap removal tool - #ST55
- Amp pin crimping tool - #ST65
- Amp pin removal tool - #ST67
- Power driver bit, 7/64 - #ST66
- Extra long tee handler (5/32") for #10 hex screw - #ST20
- Extra long tee handler (9/64") for #8 hex screw - #ST15
- Extra long tee handler (7/64") for #6 hex screw - #ST7
- Reaction chamber hone 2" - #ST10
- Reaction chamber hone 1" - #ST11
- 1" O-ring installation tool - #STK12
- MTA punch down tool - #ST68SA
- Ozone leak test kit - #STK13
- Miscellaneous parts kit - #STK14

Please contact your ClearWater Tech dealer for more information

Service Tool Kit

From ClearWater Tech, LLC.

Miscellaneous Parts Kit - #STK14

- Amp connector, male - #CON130
- Hardware Kep nut, 8/32” - #HWN8002
- Amp connector, female - #CON125
- MTA-100 Connector, 2 pin, White - #CON160
- MTA-100 Connector, 2 pin, Red - #CON162
- MTA-100 Connector, 3 pin, White - #CON165
- Shorting jumper connector - #ECC10
- Screw, Phillips pan head, #8 x1/2”- #HWS3002
- Sealing Viton washer - #HSW100
- Washers for sealing and screws - #HWS9004
- High voltage wiring assembly - #RCC85SA
- Silicon dielectric lubricant - #CHM321
- External loop wire assembly - #WA238
- Ring terminal connector - #CON450
- Tab connector, female, red - #CON505
- Tab connector, female, blue, small - #CON810
- 5A fuse, used in most units - #FUS20
- 10A fuse, for NX series and Aerous - #FUS25
- 5A fuse for PSR820 power supplies - #FUS50
- 5A fuse for H.O. drive boards - #FUS75
- Screws for end cap mounting - #HWS2010
- ¼” Compression fitting x ¼”MPT , Kynar- #FTK134
- UV window, clear - #PP70

Air Flow & Vacuum Operating Parameters

All ClearWater Tech ozone generators have established airflow and vacuum operating parameters that allow for optimum system performance. Some models have built-in airflow and vacuum gauges to monitor these parameters, while others are not so equipped. It is recommended that pre-assembled gauge kits (available from ClearWater Tech) are used on models not equipped with built-in gauges.

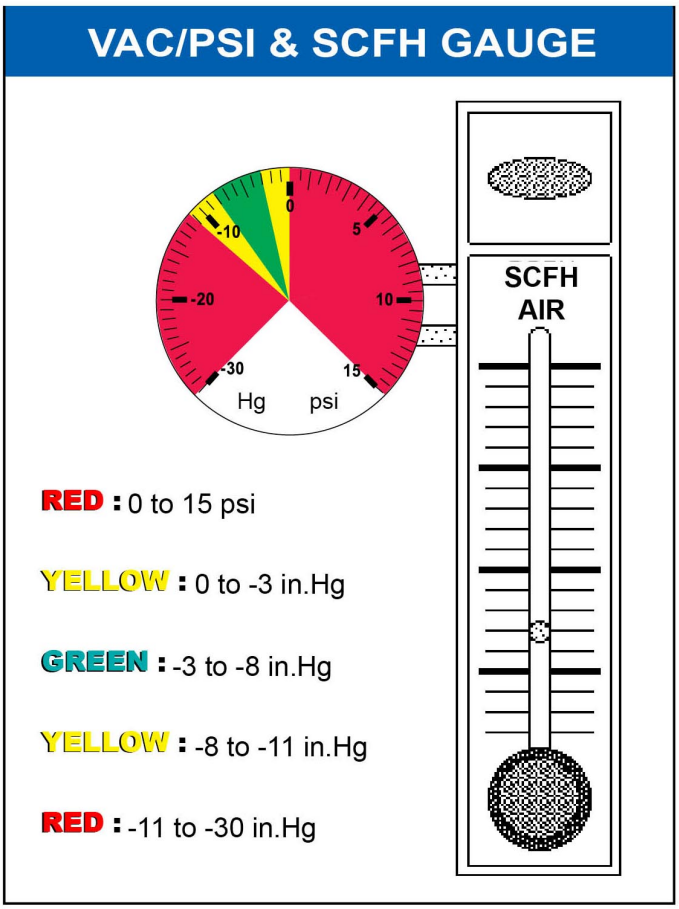

The optimum amount of airflow into the ozone generator (measured in SCFH, or Standard Cubic Feet per Hour) will vary depending on the model. A general rule is as follows: Each vacuum operated 2" ozone reaction chamber requires 7 SCFH. Each vacuum operated 1" ozone reaction chamber requires 4 SCFH.

The correct amount of vacuum will be identical for all corona discharge ozone generators in the ClearWater Tech product line. The VACUUM/PSI gauge supplied by ClearWater Tech is color-coded for easy reading – the RED zones indicate excessive pressure or vacuum (immediate adjustment is necessary), the YELLOW zones are caution areas, and the GREEN zone is the ideal operating range (slight vacuum).

To make air flow adjustments, use the adjustment valve on the SCFH gauge (either built-in or supplied as a kit) until the correct amount of air flow is achieved. These specifications are outlined in the "Start-Up and Calibration" section of the ozone generator Installation and Operation Manual.

To make adjustments to the amount of vacuum, use the ball valve on the ozone injector manifold(s). If the needle on the VACUUM/PSI gauge is in the red zone on the left side of zero (excessive vacuum), slowly open the ball valve until the needle is in the green zone. If the needle is in the red zone on the right side of zero (excessive pressure), slowly close the ball valve until the needle is in the green zone. **Note: The correct amount of vacuum for all ClearWater Tech ozone generators is –3 to –8 in./Hg (inches of mercury). In all cases, extreme vacuum or pressure conditions must be avoided!**

VACUUM/PSI Gauge

- **RED ZONE** – left (excessive vacuum – immediate attention required): -11 to -30 in./Hg
- **YELLOW ZONE** – left (caution – over vacuum): -8 to -11 in./Hg
- **GREEN ZONE** – ideal operation: -3 to -8 in./Hg
- **YELLOW ZONE** – right (caution – low vacuum): 0 to -3 in./Hg
- **RED ZONE** – right (excessive pressure-immediate attention required): 0 to 15 lb./sq. in. (psi)

Note: This information supersedes the airflow and vacuum information presented in this manual.

Apex II and III Quick Installation Guide

Product Description

The ClearWater Tech, Apex Packages are complete and fully integrated for easy installation. The Apex II system includes the CD10/AD ozone generator with internal air dryer for output efficiency, a variable 0-100% ozone output control, with a LED display. The Apex III system includes the CD12/AD or M15/AD ozone generator with internal air dryer. All systems include a positive atmospheric Vacuum Break for water back flow prevention, an Injector Manifold with Check Valve Assembly for mass transfer of ozone in solution, and a SCFH (Standard Cubic Feet Per Hour) and Vacuum Gauge Assembly for accurate operating parameter measurements. This gauge assembly also includes a normally open Vacuum Switch that connects to the External Loop of the ozone generator. When vacuum is sensed this vacuum switch will close creating continuity through the External Loop and initiate ozone production, similarly when vacuum is not sensed the vacuum switch will open interrupting ozone production. A booster pump, contact vessel and off-gas vent not included in this system may also be required.

Shown: Apex II System

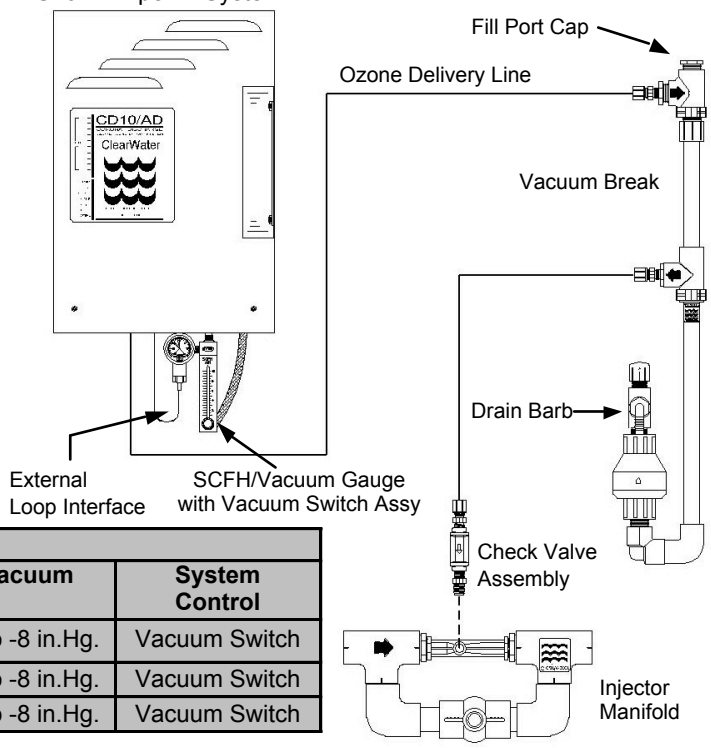

Specification Chart				
System	**Ozone Generator**	**Ozone Output**	**Vacuum**	**System Control**
APEX II	CD10/AD	1.3g/h @ 4 SCFH 1% by weight	-3 to -8 in.Hg.	Vacuum Switch
APEX III	CD12/AD	2.8g/h @ 7 SCFH 1% by weight	-3 to -8 in.Hg.	Vacuum Switch
APEX III	M15/AD	2.8g/h @ 7 SCFH 1% by weight	-3 to -8 in.Hg.	Vacuum Switch

Quick Install

NOTE: The CD10/AD, CD12/AD, and M15/AD ozone generators are equipped with an internal heat regenerative dry air system. It is recommended that the unit be energized for 24 hours prior to installation. This will allow the dryer to reach operating temperature and vaporize any moisture that may have built up in the sieve beds.

Step 1: Unpack and placement. Mount ozone generator to a suitable flat vertical surface.

Step 2: Plug the ozone generator into a main power source (CD10/AD 90-250VAC 47-63Hz., CD12/AD 90-240VAC 47-63Hz., M15/AD 120/240VAC 50/60Hz.) **NOTE: The ozone generator must be energized by a constant unswitched power source.**

Step 3: Mount the SCFH/Vacuum Gauge with Vacuum Switch Assembly to the ozone generator according to the installation directions provided.

Step 4: Mount Vacuum Break to a suitable flat vertical surface, using the Clic® clamps provided.

Step 5: Install the side stream booster pump, if required. The booster pump will require separate dedicated power.

Step 6: Install the Injector Manifold and thread the Check Valve Assembly into the Venturi. To prepare for start-up close the by-pass valve half way. This will create vacuum at the injector as soon as the water is flowing through the injector manifold.

Step 8: Install the contact vessel and off-gas vent (if so equipped).

Step 9: Remove Vacuum Break Fill Port Cap. Fill the Vacuum Break with water through fill port until the water spills out of the drain barb. Replace fill port cap.

Step 10: Connect the Teflon® ozone delivery line; from the ozone generator to the vacuum break, then from the vacuum break to the injector manifold check valve assembly.

Step 11: An external 4-20mA control signal may be used to control ozone output. According to the 4-20mA control device I/O Manual, wire in the Orange (+) and Purple (-) leads (located under the CD10/AD and CD12/AD) to the 4-20mA controller. **NOTES: The 4-20mA signal will over-ride the Manual Ozone Output Control setting. This feature is only available with the CD10/AD and CD12/AD.**

Step 12: The External Loop (located under the ozone generator) must be removed. Install the two-position male connector of the Vacuum Switch (located on the gauge assembly) into the two-position female connector located on the chassis of the ozone generator. **NOTE: The term 'dry contact' means that this loop does not supply output nor except input voltages.**

Step 13: Switch the main power switch of the ozone generator to the 'ON' position (if not already done so).

Step 14: Apply main power to the booster pump and/or side stream booster pump to initiate water flow.

Step 15: Make final adjustments to the to by-pass valve on the injection manifold and needle valve of the SCFH/Vacuum gauge with Vacuum Switch Assembly to set the SCFH, while at the same time achieving the correct vacuum (middle of the 'Green Zone'). **NOTE: See Specification Chart above for the normal operating parameter settings.**

Apex IV and VI Quick Installation Guide

Product Description

The ClearWater Tech, LLC. Apex Packages are complete and fully integrated for easy installation. The Apex IV and VI both use Pressure Swing Absorption (PSA) oxygen technology for maximum ozone output efficiency, a variable output Ozone Generator with an LED light display, a positive atmospheric Vacuum Break for water back for prevention, an Injector Manifold with Check Valve Assembly for mass transfer of ozone in solution and an SCFH (Standard Cubic Feet Per Hour) and Vacuum Gauge Assembly for accurate operating parameter measurements. The assembly also includes a normally open Vacuum Switch that will signal the AIF interface box, which will energize and de-energize the ozone generator and the oxygen concentrator.

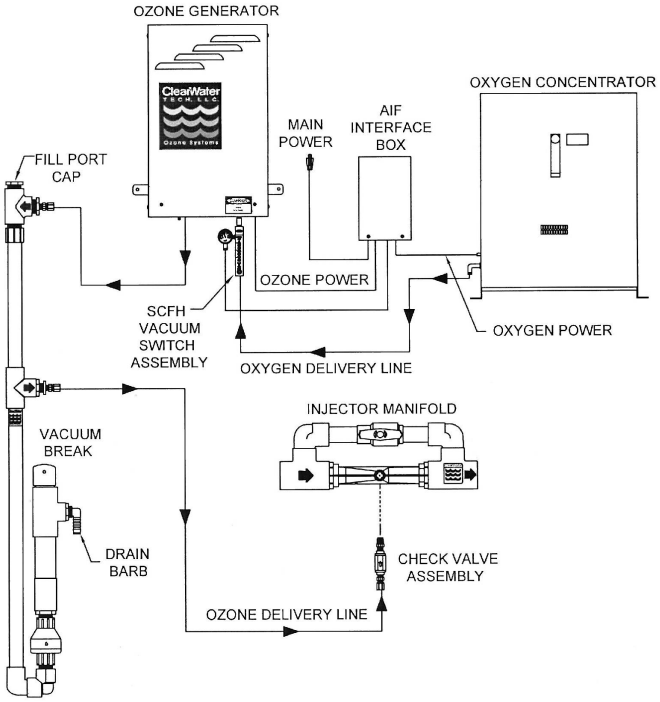

Specification Chart				
System	**Ozone Generator**	**Ozone Output**	**Vacuum**	**System Control**
Apex IV	CD10	4.0g/h @ 4 SCFH 3% by weight	-3 to -8inHg	Vacuum Switch
Apex VI	CD12	8.0g/h @ 8 SCFH 3% by weight	-3 to -8inHg	Vacuum Switch

Quick Install

Step 1: Unpack and placement. Mount ozone generator to a suitable flat vertical surface.

Step 2: Install the side stream booster pump, if required. The booster pump will require separate dedicated power.

Step 3: Install the Injector Manifold and thread the Check Valve Assembly into the Venturi. To prepare for start-up close the by-pass valve half way. This will create vacuum at the injector as soon as water is flowing through the injector manifold.

Step 4: Install the contact vessel and off-gas vent (if so equipped).

Step 5: Apply separate power to the oxygen concentrator and set the air flow to 4 SCFH for an Apex IV or 8 SCFH for an Apex VI before connecting delivery line to the ozone generator. **NOTE: The SCFH gauge on the oxygen concentrator will reduce in flow rate after connecting the oxygen delivery line.**

Step 6: AIF10 120VAC 60 Hz - Plug in both the ozone generator and oxygen concentrator into the outlets provided. **NOTE: There is no specific orientation of the plugs.** AIF20 240VAC 50/60Hz - Cut off the plugs of the ozone generator and oxygen concentrator main power cords. Strip cord back and terminate inside the AIF20 to the main terminal strip provided. **NOTE: Use main power ground stud (inside AIF20) to ground both units.**

Step 7: Mount the SCFH/Vacuum Gauge Assembly to the ozone generator according to the installation directions provided. **NOTE: Plug 2-position connector into the bottom of the AIF interface box.**

Step 8: An external 4-20mA control signal may be used to control ozone output. According to the 4-20mA control device I/O Manual, wire in the Orange (+) and Purple (-) leads located under the ozone generator to the 4-20mA controller. **NOTES: The 4-20mA signal will over-ride the Manual Ozone Output Control setting.**

Step 9: Attach the barbed fittings to the indicator cartridge and connect the braided oxygen delivery lines using hose clamps.

Step 10: Connect the Teflon® ozone delivery line; from the ozone generator to the vacuum break, then from the vacuum break to the injector manifold check valve assembly.

Step 11: Remove Vacuum Break Fill Port Cap. Fill the Vacuum Break with water through fill port until the water spills out of the drain barb. Replace fill port cap.

Step 12: Switch the main power switch of the ozone generator to the 'ON' position (if not already done so). Apply Main Power to the AIF box.

Step 13: Apply main power to the booster pump and/or side stream booster pump to initiate water flow.

Step 14: Make final adjustments to the to by-pass valve on the injection manifold and needle valve of the SCFH/Vacuum gauge assembly to set the SCFH, while at the same time achieving the correct vacuum (middle of the 'Green Zone').

NOTE: See Specification Chart above for the parameter settings.

Apex VII and VIII Quick Installation Guide

Product Description

The ClearWater Tech, LLC. Apex Packages are complete and fully integrated for easy installation. The Apex VII and VIII both use Pressure Swing Absorption (PSA) oxygen technology for maximum ozone output efficiency, a variable output Ozone Generator with an LCD display, a positive atmospheric Vacuum Break for water back flow prevention, and Injector Manifold with Check Valve Assembly for mass transfer of ozone in solution.

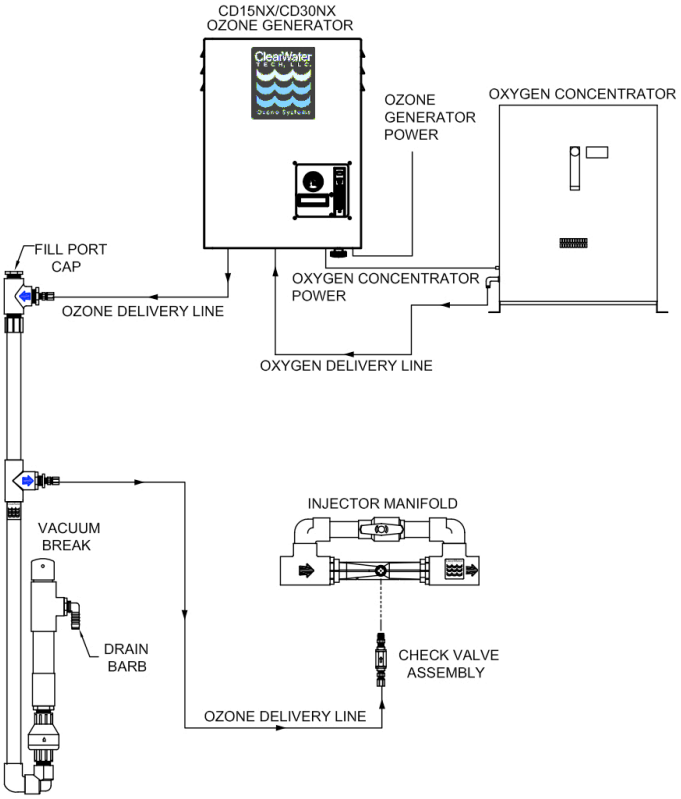

Specification Chart				
System	**Ozone Generator**	**Ozone Output**	**Vacuum / Pressure**	**System Control**
Apex VII	CD15nx	15.0g/h @ 7.5 SCFH 5% by weight	-3 to -8inHg / 10PSI	Vacuum & Pressure Switch
Apex VIII	CD30nx	30.0g/h @ 15 SCFH 5% by weight	-3 to -8inHg / 10PSI	Vacuum & Pressure Switch

Quick Install

Step 1: Unpack and placement. Mount ozone generator and peripheral equipment to a suitable flat vertical surface.

Step 2: Install the side stream booster pump, if so required. The booster pump will require separate dedicated power.

Step 3: Install the Injector Manifold and thread the Check Valve Assembly onto the Venturi. To prepare for start-up close the by-pass valve half way. This will create vacuum at the injector as soon as water is flowing through the injector manifold.

Step 4: Install the contact vessel and off-gas vent (if so equipped).

Step 5: Apply separate power to the oxygen concentrator and set the air flow to 15 SCFH prior to connecting delivery line to the ozone generator. **NOTE: The SCFH flow meter on the oxygen concentrator will reduce in flow rate after connecting the oxygen delivery line.**

Step 6: Remove the ½ inch conduit knockout located at the bottom of the ozone generator and install the ½ inch strain relief fitting and lock-nut (located in the parts back), into the exposed conduit knockout hole.

Step 7: Cut the plug off from the oxygen concentrator cord, and feed the cord into the strain relief, and tighten strain relief fitting.

Step 8: Terminate the oxygen concentrator wires to the terminal strip located inside the ozone generator, as instructed by the terminal strip diagram, located on the inside of the ozone generator cover. **NOTE: The oxygen concentrator must be rated for the same voltage that will be applied to the ozone generator.**

Step 9: An external 4-20mA control signal may be used to control ozone output. See the detail installation steps of this procedure in the ozone generator manual.

Step 10: Connect the Teflon® ozone delivery line; from the ozone generator to the vacuum break, then from the vacuum break to the injector manifold check valve assembly.

Step 11: Remove Vacuum Break Fill Port Cap. Fill the Vacuum Break with water through fill port until the water spills out of the drain barb. Replace fill port cap.

Step 12: Apply main power to the ozone generator. Switch the main power switch of the ozone generator to the 'ON' position (if not already done so).

Step 13: Apply main power to the main circulation booster pump and/or side stream booster pump to initiate water flow.

Step 14: Make final adjustments to the to by-pass valve on the injection manifold to insure a vacuum is present. Adjust the backpressure needle valve (located at the bottom of the ozone generator) till the pressure gauge (located on the front view window of the ozone generator achieves 10 PSI. **Note: The LCD screen located on the front of the ozone generator will read "No Vacuum" and/or "No Pressure" until adequate levels are achieved. See Specification Chart above for the parameter settings.**

Step 15: To adjust the ozone output manually, use the two programming buttons located at the bottom of the ozone generator. Holding down the left button will reduce ozone output and the right button will increase the ozone output. **Note: For further programming and control see the ozone generator manual.**

Normal Operating Parameters

Vacuum Operated Ozone Generators

ClearWater Tech. Product:_____

Serial Number:_____

Installation Date:_____

SCFH: Oxygen Generator_____

Vacuum: (-3) - (8) in. Hg. *ORP: _____*

*Ambient Temp:*20° F to 85° F ph:

Cabinets Only:

Vacuum Switch Setting: -3 in. Hg.

Ozone Output 0-100%: set by customer (if so equipped)

Maintenance Schedule

Monthly Check List

- Check All Normal Operating Parameters
- Observe Fan (s) On
- Clean Fan Filter(s) (1)
- Unit should be warm to touch
- Observe Indicating lights

		YEAR				
		1	2	3	4	5
MONTH	1					
	2					
	3					
	4					
	5					
	6					
	7					
	8					
	9					
	10					
	11					
	12					

Annual Maintenance

- Replace non-indicating desiccant
- Replace Indicating desiccant (as required)

Year	
1st	
2nd	
3rd	
4th	
5th	

1 - Under normal operation the indicating desiccant will be blue and white in color. If moisture is present the desiccant will change to pink and white orall white.

2- Determined by the ambient humidity conditions, the non-indicating desiccant may need to be replaced more frequently.

Normal Operating Parameters

Pressure Operated Ozone Generators

ClearWater Tech. Product:_____

Serial Number:_____

Installation Date:_____

SCFH: Oxygen Generator_____

Pressure: 9 to 12 psi *ORP: _____*

Ambient Temp:20° F to 85° F *PH: _____*

Pressure switch setting: 9 psi

Ozone output 0-100%: set by customer (if so equipped)

Maintenance Schedule

Monthly Check List

- Check All Normal Operating Parameters
- Observe Fan (s) On
- Clean Fan Filter(s) (1)
- Inspect ozone delivery line for water
- Observe Power Light on Drive(s)
- Clean booster pump basket

		YEAR				
		1	2	3	4	5
MONTH	1					
	2					
	3					
	4					
	5					
	6					
	7					
	8					
	9					
	10					
	11					
	12					

Annual Maintenance

- Replace fan filter(s) (1)
- Replace check valve(s)
- Replace inline filter
- Rebuild solenoi(s) if so equipped
- Remove & clean dielectric
- Clean vacuum break

Year	
1st	
2nd	
3rd	
4th	
5th	

1 - Operating conditions in the equipment area will dictate the frequency required of this procedure

2- See Installation and Operation Manual for all maintenance prodedures

Rev. 9/02

Normal Operating Parameters
Oxygen Concentration Systems

ClearWater Tech. Product:_____

Serial Number:_____

Installation Date:_____

SCFH:_____

Ambient Temp:20° F to 85° F

Relative Humidity:0 - 90 %

Maintenance Schedule

Monthly Check List
•Check All Normal Operating Parameters •Observe Fan(s) On (if app.) •Clean Fan Filter(s) (1) (if app.) •Inspect Air Prep Desiccant (blue and white)

		YEAR				
		1	2	3	4	5
MONTH	1					
	2					
	3					
	4					
	5					
	6					
	7					
	8					
	9					
	10					
	11					
	12					

Annual Maintenance
•Change External Air Filter(s) (if app.) (1) •Change Compressor Inlet Filter(s) (1) •Rebuild Compressor(s)

Year	
1st	
2nd	
3rd	
4th	
5th	

1 - Operating conditions in the equipment area will dictate the frequency required of this procedure

2 - Under normal operating conditions the ATF module require any maintenance

Rev. SEP02

ClearWater Tech, LLC

OZONE REACTION CHAMBER EXCHANGE PROGRAM




BENEFITS

- **Saves time - less time for service calls**
- **Simple - swap old reaction chamber for new**
- **Inexpensive**
- **Less parts to store**
- **Core exchange credit**

OZONE REACTION CHAMBER EXCHANGE PROGRAM

ClearWater Tech, LLC (CWT) is proud to announce our ozone reaction chamber exchange program. This program has been designed to simplify service and maintenance of our ozone reaction chambers.

All CWT ozone reaction chambers are field serviceable with maintenance kits provided by CWT, however, providing this service in the field requires a mechanical hand and can be time consuming. Our exchange program will reduce time in the field, reduce the number of stocked parts, increase reliability, and the comfort of having a factory-refurbished and tested reaction chamber. These refurbished reaction chambers are available for each of our three styles of ozone reaction chambers.

THE PROGRAM

- Swap out old reaction chamber for the factory rebuilt reaction chamber. Instructions are included.
- Return old reaction chamber, or core, to CWT freight pre-paid.
- With a returned reaction chamber, no matter the condition, CWT will credit the core charge for each reaction chamber.
- There are no return numbers necessary to return the used reaction chambers. Simply include the included paperwork from the factory-refurbished cores with the return of the old chambers. Not including the paperwork can delay the refund.
- Customers have up to six months from the date of purchase to return the used reaction chambers to obtain credit.

Core Part Number	Reaction Chamber Style	Ozone Generator Model
RCC17C	1 inch Vacuum	CD10, CD10AD
RCC18C	1 inch Vacuum	CD12 Right, ECO2 [x2]
RCC19C	1 inch Vacuum	CD12 Left
RCC21C	1 inch Vacuum	ECO1
RCC7C	2 inch Vacuum	M15AD, CD15AD, P2000, CD2000
RCC8C	2 inch Vacuum	M1500, CD1500
RCC4C	2 Inch Vacuum	CD4000, CD4000HO, CD6000, CD6000HO, CD8000, CD8000HO, CD12000, CD12000HO
RCC10C	2 inch Pressure	CD2000P, SC27P, ECO3, ECO4
RCC9C	2 inch Pressure	CD1500P
RCC11C	2 inch Pressure	CD4000P, CD6000P, CD8000P, CD12000P

ClearWater Tech, LLC
Ozone Systems for Water & Air Purification
800-262-0203 • 850-E Capitolio Way, San Luis Obispo, CA 93401
sales@cwtozone.com • www.cwtozone.com

REV080813

CWT Reaction Chamber Core Return Form

INCLUDE THIS FORM WITH RETURN SHIPMENT

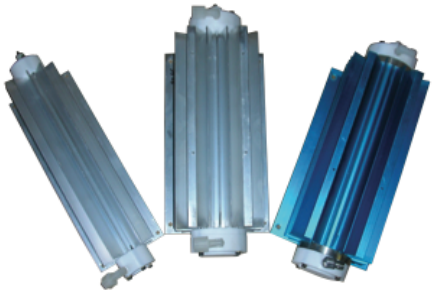

To insure the core is credited promptly, please complete the information below. The email and phone number information will only be used if we need to contact you regarding the credit of the core.

The Order ID contains the letter "S" followed by numbers (e.g. S54222) can be found on the pack slip or it is written on the box of the original shipment.

Order ID: _____

Customer Name: _____

Company Name (if applicable): _____

Phone: _____

Email: _____

Comments: _____

_____

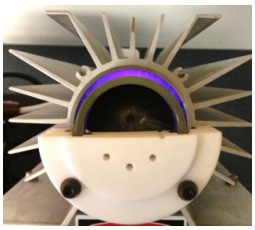

Cutout view of the reaction chamber

Package the reaction chamber(s) in the original packaging, if available, include a copy of this form and return it to ClearWater Tech.

Ship to:

ClearWater Tech LLC
850-E Capitolio Way
San Luis Obispo, CA 93454

If you have any questions, please contact us at 800.262.0203 and press "2" at the prompt. Our email address is service@cwtozone.com

Annual Maintenance Procedure

FOR USE WITH CD10, CD10/AD, CD12 & CD12/AD

Maintenance of the ozone system is critical to its longevity and operating efficiency. Follow the steps below to perform the preventative annual maintenance. If you have additional questions regarding the maintenance of your ozone installation, please consult the operation manual or contact your dealer.

Before you start:

System Shutdown Procedures

Step 1: Turn off power to any peripheral system hydraulic components and air prep system.

Step 2: Turn the Main Power switch on the ozone generator to the "OFF" position. The LED display on the front cover should *not* be illuminated.

Step 3: Disconnect the power to the ozone system at the service disconnect box (if so equipped), main circuit breaker or by disconnecting the power cord.

Recommended Tools

Nut Drivers: 5/16", 11/32"
Screwdrivers: Phillips and flat-head
O-Ring Removal Pick
Hex Key: 7/64"
Marking Pen
Wrench: 5/8" or adjustable
1" Ball hone (optional)
Channel lock-type Pliers
Snap Ring Pliers (for CD10/AD & CD12/AD)
Cloth Shop Towel
Denatured Alcohol
Teflon Sealing Tape

Video Walkthroughs

Visit our video channel at:
http://www.youtube.com/ClearWaterTech
These, and other procedures are shown.

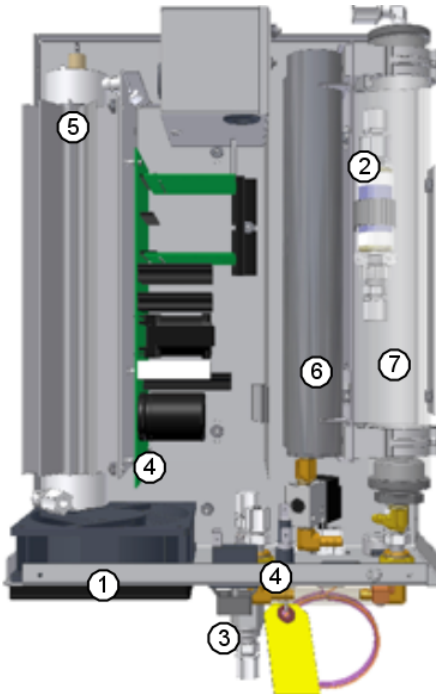

Included in this maintenance kit:

Pictured are the contents of a CD10/AD maintenance kit and an overview image of the CD10/AD.

Numbered items correspond to descriptions below and their installed locations within the ozone generator.

CD10, CD12 & CD12/AD systems will have similar maintenance kits and generator layouts. They will have differences in quantity of parts, however the steps will be the same.

The CD10 & CD12 models will not have the media for internal air dryers (#6 & #7).

CD12 & CD12/AD models will have a second set of o-rings (#5), as the units have two reaction chambers.

Maintenance Will Involve the Following:

1. **Cooling Filter:** Clean or replace the cooling fan filter elements as required.
2. **Inline Particulate Filter:** Remove colored protective caps before installing the new filter. Re-tape threads with Teflon tape. Orientation is universal.
3. **Check Valves:** Replace both check valves, one at the ozone generator and one at the injector. Make note of check valve direction before removing old check valve and reinstall new valve in same direction. Re-tape threads with Teflon tape.
4. **Fuses:** Save the replacement fuses for use as needed.
5. **Reaction Chamber O-Ring Replacement:** See page 2 for reaction chamber maintenance instructions.
6. **Air Dryer Media:** See page 3 for air preparation maintenance instructions.
7. **Indicating Media:** See page 3 for air preparation maintenance instructions.

Annual Maintenance Procedure

FOR USE WITH CD10, CD10/AD, CD12 & CD12/AD

Reaction Chamber Removal and Disassembly:

1" Reaction Chamber - Exploded View

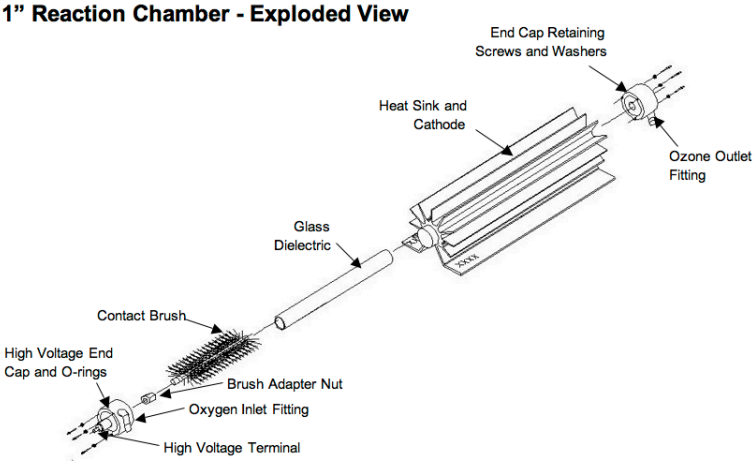

Note: Read through all the steps before disassembling the reaction chamber.

Step 1: Make sure all power to the ozone generator has been disconnected according to the "System Shutdown Procedures" outlined above.

Step 2: Disconnect the high voltage lead from the reaction chamber(s).

Step 3: Disconnect the tubing connections on both ends of the reaction chamber(s).

Step 4: Remove the 4 nuts securing each chamber and remove the reaction chamber from ozone generator.

Step 5: Make note or mark the position of the end caps and their elbow fittings on the reaction chambers, during re-assembly the end caps will need to return to original positions. The orientation of the end caps and the chamber itself is different between the two CD12 chambers.

Step 6: Remove retaining screws and washers from the two end caps (3 each).

Step 7: Using a gentle back-and-forth twisting motion, remove the non-high voltage end cap (the one *without* the high voltage attachment screw) from the heat sink/cathode assembly. A flat-head screwdriver may be used to gently pry the end cap off, as long as equal pressure is applied to each side of the end cap.

Step 8: Remove the high voltage end cap and dielectric from the heat sink/cathode assembly.

Step 9: The high voltage end cap can be removed by holding the glass and turning the end cap counter-clockwise approximately 6 turns. Pull the end cap off the glass. Push the contact brush out of the dielectric glass. A screwdriver can be used to push the brush, and pliers to pull it out once the opposing end is exposed.

Step 10: Inspect the dielectric, end caps and cathode for breakage, corrosion or debris; then follow the assembly and re-installation steps below.

Reaction Chamber Assembly and Re-installation:

Step 1: Remove o-rings from end caps, clean the dielectric glass, end caps and interior of the stainless steel cathode cylinder. Use denatured alcohol, shop towels to clean and be sure to remove all old o-ring debris. A 1" ball hone can be used to clean the major debris out of the cathode if there is heavy buildup.

Step 2: Prepare the end caps for re-assembly by replacing the o-rings. Thread the hex brush adapter nut, with contact brush attached, onto the end of the high voltage end cap (cap with the high voltage attachment screw) center screw. Re-tape the threads of the elbow fittings if needed.

Step 3: Using a gentle twisting motion, press the *non*-high voltage end cap onto the heat sink/cathode assembly until flush with the heat sink cooling fins. Turn the end cap to the correct orientation.

Step 4: Slide the three end cap retaining screws with washers through the holes in the non-high voltage end cap, aligning them with the heat sink screw bosses. Thread screws into screw bosses until heads are snug against the end cap.

Step 5: Next we focus on assembling the rest of the subcomponents, before installing them into the reaction chamber. *Slowly* insert the brush (installed onto the high voltage end cap) into the dielectric glass. **Note:** Go slowly in order to prevent or minimize bending the center wire of the brush during this procedure. It is normal for the bristles to bend flat against the dielectric glass. Fully seat the dielectric glass into the high voltage end cap. Clean the glass with denatured alcohol once more, and do not retouch the glass without re-cleaning.

Step 6: Hold the reaction chamber upright on a flat surface, empty high voltage side up. Grasp the high voltage end cap and lower the glass into the reaction chamber. Press directly downwards on the high voltage end cap to fully seat the dielectric assembly; the end caps should be flush with the heat sink cooling fins. Turn the end cap to the correct orientation.

Step 8: Slide the three end cap retaining screws with washers through the holes in the end cap, aligning them with the heat sink screw bosses. Thread screws into screw bosses until heads are snug against the end cap.

Step 9: Re-install the complete reaction chamber assembly into the ozone generator by securing the reaction chamber to its mounts, securing delivery line and connecting the high voltage insulated wire.

Annual Maintenance Procedure

FOR USE WITH CD10, CD10/AD, CD12 & CD12/AD

Air Preparation System

CD10/AD and CD12/AD only: The tan colored beads are an air dryer desiccant. The blue and white media is typically called indicating media. It is silica gel and acts as an indicator of the health of the air dryers.

If the air dryer desiccant requires replacement, moisture will be present in the dryer's output. The silica media will absorb the moisture and will change the blue crystals to pink, then white. If the indicating media has changed color, this maintenance of replacing the media should resolve the issue and restore proper ozone output. If the indicating media has yet to change color, it is recommended to replace the air dryer media for preventative maintenance. The indicating crystals can be saved for future use, or installed; it is optional in this case.

For steps regarding replacement of these medias see "Air Dryer Desiccant Replacement" and "Indicating Media Replacement" below.

CD10 and CD12 only: Your air prep system will consist of either a PSA Oxygen Concentrator or LPSA Dry Air. Compressors, PSA Oxygen Concentrator or LPSA Dry Air: Following the procedures outlined in the compressor rebuild kit, rebuild the two compressor heads and replace all filters.

Note: Manufacturers' recommended interval is 5,000 to 12,000 hours of operation. Compressor performance and/or operating conditions in the equipment area will dictate the required frequency of this procedure.

Air Dryer Desiccant Replacement

Note: You will need to remove the unit from the wall in order to pour out the media. Allow the air dryer chambers to cool completely and read all steps before continuing.

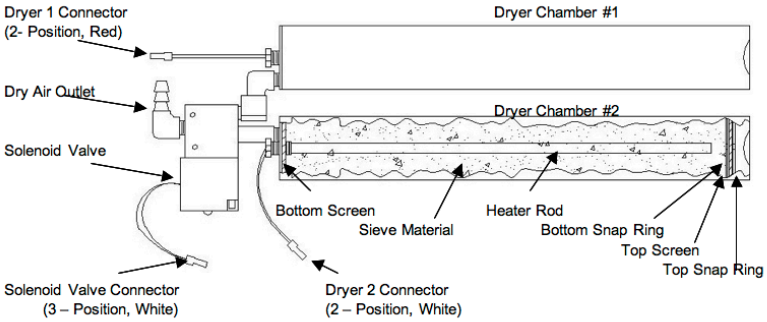

Step 1: Straighten out the ends of the dryer chambers using pliers.

Step 2: Using a snap ring tool, remove the top snap rings.

Step 3: Remove the top screens; the o-ring pick is handy for this. The bottom snap ring may be left remaining within the air dryer chambers.

Step 4: Turn the ozone generator over to pour the old sieve material from the dryer chambers and dispose. **Note:** When removing the sieve material, be sure not to discard the bottom screens.

Step 5: Re-seat/Re-install the bottom screens. **Note:** The heater rod must be put through the center of the bottom screens.

Step 6: Fill chamber with new sieve material to 3/4" to 1" below the top of the dryer chambers. You will have more media than needed.

Step 7: Re-install the top screens.

Step 8: Using a snap ring tool, place the top snap rings snug against the top screen.

Step 9: Bend the ends of the dryer chambers in-ward for added retention of the sieve material (optional).

Step 10: The ozone generator must be turned on for 24 hours prior to system start-up to eliminate any moisture trapped in the new sieve material.

Indicating Media Replacement

Step 1: Using wrench, loosen and disconnect the compression fitting located at the top of the indicating media chamber.

Step 2: With a flat-head screwdriver, unlock the two gray clamps securing the indicating media chamber.

Step 3: Pull the chamber free of the clamps, the chamber will only be held within the unit by the bottom cap. Rotate the chamber downwards to position the bottom cap to be at the top of the chamber.

Step 4: Secure the bottom cap with channel lock pliers and turn the chamber counter-clockwise to unscrew it. Be mindful to not spill the indicating media.

Step 5: Remove the indicating chamber from the unit, **remove the interior screen** and dispose of the media.

Step 6: Remove the Teflon tape from the bottom cap's threads and re-tape the threads with 2-3 wraps.

Step 7: Refill the indicating chamber with new blue and white indicating crystals. You will have more media than needed.

Step 8: Replace the interior screen and reinstall the chamber following steps 1 through 4 in reverse order.

Annual Maintenance Procedure

FOR USE WITH CD1500P, CD2000P, CD15nx & CD30nx

Maintenance of the ozone system is critical to its longevity and operating efficiency. Follow the steps below to perform the preventative annual maintenance. If you have additional questions regarding the maintenance of your ozone installation, please consult the operation manual or contact your dealer.

Before you start:

System Shutdown Procedures

Step 1: Turn off power to any peripheral system hydraulic components and air prep system.

Step 2: Turn the Main Power switch on the ozone generator to the "OFF" position.

Step 3: Disconnect the power to the ozone system at the service disconnect box (if so equipped), main circuit breaker or by disconnecting the power cord.

Recommended Tools

Nut Driver: 11/32", 3/8"
Screwdrivers: Phillips and flat-head
O-Ring Removal Pick
Hex Key: 7/64"
Wrench: 5/8" or adjustable
2" Ball hone (optional)
Cloth Shop Towel
Denatured Alcohol
Scissors
Teflon Sealing Tape

Video Walkthroughs

Visit our video channel at:
http://www.youtube.com/ClearWaterTech
These, and other procedures are shown.

CD30nx – Ozone Generator

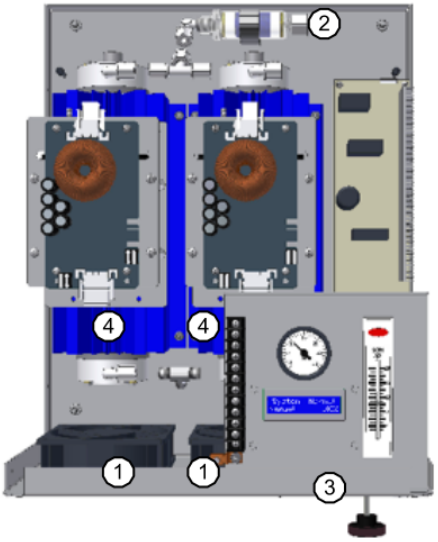

Included in this maintenance kit:

Pictured are overview images of the CD30nx and the contents of a CD30nx maintenance kit.

Numbered items correspond to descriptions below and their installed locations within the ozone generator.

CD1500P, CD2000P & CD15nx systems will have similar maintenance kits and generator layouts. They will have differences in quantity of parts and type of circuit boards however the steps will be the same.

The CD1500P & CD15nx models will have a single set of o-rings (#4), as the units have one reaction chamber.

Maintenance Will Involve the Following:

1. **Cooling Filter:** Clean or replace the cooling fan filter elements as required.
2. **Inline Particulate Filter:** Remove colored protective caps before installing the new filter. Re-tape threads with Teflon tape. Orientation is universal.
3. **Fuses:** Save the replacement fuses for use as needed.
4. **Reaction Chamber O-Ring Replacement:** See page 2 for reaction chamber maintenance instructions.
5. **Check Valve:** Replace the check valve at the injector. Make note of check valve direction before removing old check valve and reinstall new valve in same direction. Re-tape threads with Teflon tape.

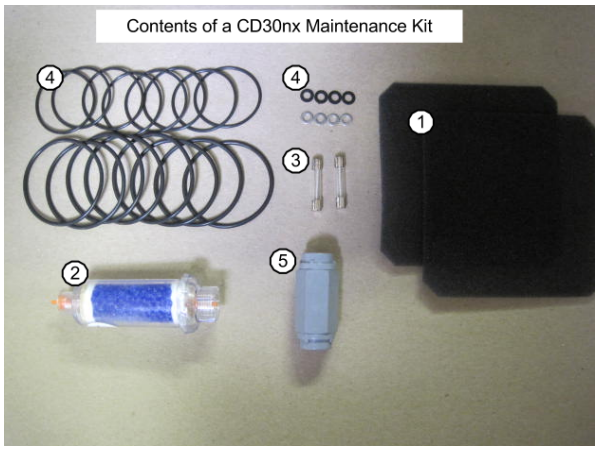

Annual Maintenance Procedure

FOR USE WITH CD1500P, CD2000P, CD15nx & CD30nx

Reaction Chamber Removal and Disassembly:

2" Pressurized Reaction Chamber – Exploded View

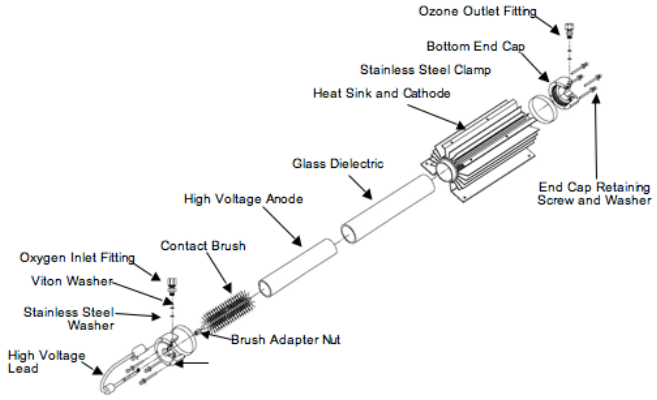

Note: Read through all the steps before disassembling the reaction chamber.

Step 1: Make sure all power to the ozone generator has been disconnected according to the "System Shutdown Procedures" outlined above.

Step 2: Disconnect the white high voltage lead from the black transformer, the black insulation boot will have to be drawn back to expose the connection.

Step 3: If rebuilding a CD1500P: Disconnect wire connections to the drive board and remove the 4-20mA control board with mounting bracket from the reaction chamber.

Step 4: Disconnect the tubing connections on both ends of the reaction chamber.

Step 5: Remove the 4 nuts securing each chamber and remove the reaction chamber from ozone generator.

Step 6: Remove retaining screws and washers from the end caps (4 each).

Step 7: Using a gentle back-and-forth twisting motion, remove the non-high voltage end cap (the one *without* the high voltage attachment screw) from the heat sink/cathode assembly. A flat-head screwdriver may be used to gently pry the end cap off, as long as equal pressure is applied to each side of the end cap. **Note:** The stainless steel straps should not be removed.

Step 8: Remove the high voltage end cap and dielectric from the heat sink/cathode assembly.

Step 9: Draw back the white cap along the white high voltage lead at the end cap, this will expose a screw to be removed. Pull/twist the end cap off the glass. Push the contact brush out of the dielectric glass. Also remove the anode (foil-like material) from within the glass, it may come out with the brush.

Step 10: Inspect the dielectric, foil, end caps and cathode for breakage, corrosion or debris; then follow the assembly and re-installation steps below.

Reaction Chamber Assembly and Re-installation:

Step 1: Remove o-rings from end caps, then clean the dielectric glass, end caps and interior of the stainless steel cathode cylinder. Use denatured alcohol and shop towels to clean and be sure to remove all old o-ring debris. A 2" ball hone can be used to clean the major debris out of the cathode if there is heavy buildup. **Note:** If the brush's core is intact, but discolored, it is likely fine. The anode foil may also have been discolored from residual oil and heat; it will not require replacement. If there are ragged ends on the foil, trim them off (1/8"-1/4") with a pair of scissors.

Step 2: Prepare the end caps for re-assembly by replacing the o-rings and replacing the Viton washers installed under the elbow fittings.

Notes: A small amount of dielectric silicon lubricant can be used on the o-rings, cathode and/or dielectric glass to make installation easier.

When replacing washers under the elbow fittings, the stainless steel washer is installed first, then the Viton washer. Re-tape the elbow fittings. The stainless steel elbow fitting is used on the non-high voltage (bottom) end cap.

Attach the high voltage lead to the screw and install it onto the high voltage end cap. Thread the hex brush adapter nut, with contact brush attached, onto the interior of the high voltage end cap.

Step 3: Using a gentle twisting motion, press the *non*-high voltage end cap onto the heat sink/cathode assembly until flush with the heat sink cooling fins. Turn the end cap to the correct orientation.

Step 4: Slide the four end cap retaining screws with washers through the holes in the non-high voltage end cap, aligning them with the heat sink screw bosses. Thread screws into screw bosses until heads are snug against the end cap.

Step 5: Next we focus on assembling the rest of the subcomponents before installing them into the reaction chamber. Roll and insert the anode foil into the glass dielectric, center the anode foil in the glass. Secure the foil with a finger against the inside of the glass to keep it centered and insert the contact brush into the dielectric. Insure the foil is centered before fully seating the glass into the high voltage end cap. Clean the glass with denatured alcohol once more, and do not retouch the glass without re-cleaning.

Step 6: Hold the reaction chamber upright on a flat surface, empty side up. Grasp the high voltage end cap and lower the glass into the reaction chamber. Press directly downwards on the high voltage end cap to fully seat the dielectric assembly; the end caps should be flush with the heat sink cooling fins. Turn the end cap to the correct orientation.

Step 7: Slide the four end cap retaining screws with washers through the holes in the end cap, aligning them with the heat sink screw bosses. Thread screws into screw bosses until heads are snug against the end cap.

Step 8: Re-install the complete reaction chamber assembly into the ozone generator by securing the reaction chamber to its mounts, securing delivery line and connecting the high voltage insulated wire. If the ozone generator is a CD15000P, reinstall the 4-20mA control board with bracket, and reconnect disconnected wires. **Note:** Insure the black and red wires are reconnected to the proper slots to prevent damage to the 4-20mA control board.

Annual Maintenance Procedure

FOR USE WITH M1500, CD1500, P2000 & CD2000

Maintenance of the ozone system is critical to its longevity and operating efficiency. Follow the steps below to perform the preventative annual maintenance. If you have additional questions regarding the maintenance of your ozone installation, please consult the operation manual or contact your dealer.

Before you start:

System Shutdown Procedures

Step 1: Turn off power to any peripheral system hydraulic components and air prep system.

Step 2: Turn the Main Power switch on the ozone generator to the "OFF" position.

Step 3: Disconnect the power to the ozone system at the service disconnect box (if so equipped), main circuit breaker or by disconnecting the power cord.

Recommended Tools

Nut Driver: 11/32", 3/8"
Screwdrivers: Phillips and flat-head
O-Ring Removal Pick
Hex Key: 7/64", 9/64" (for CD1500)
Wrench: 5/8" or adjustable
2" Ball hone (optional)
Cloth Shop Towel
Denatured Alcohol
Scissors
Teflon Sealing Tape

Video Walkthroughs

Visit our video channel at:
http://www.youtube.com/ClearWaterTech
These, and other procedures are shown.

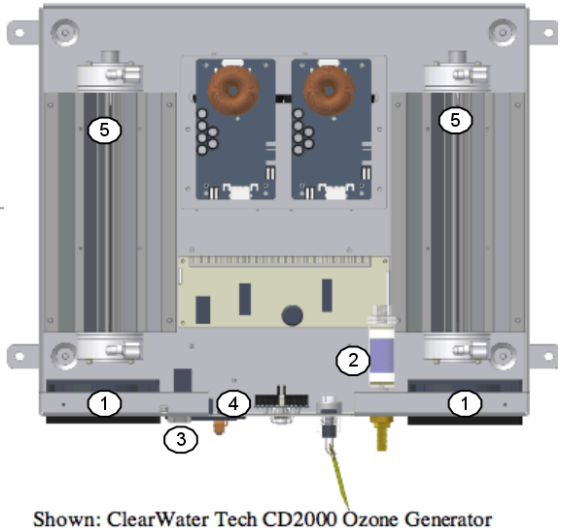

Shown: ClearWater Tech CD2000 Ozone Generator

Included in this maintenance kit:

Pictured are overview images of the CD2000 and the contents of a CD2000 maintenance kit.

Numbered items correspond to descriptions below and their installed locations within the ozone generator.

M1500, CD1500 & P2000 systems will have similar maintenance kits and generator layouts. They will have differences in quantity of parts and type of circuit boards however the steps will be the same.

The M1500 & CD1500 models will have a single set of o-rings (#5), as the units have one reaction chamber.

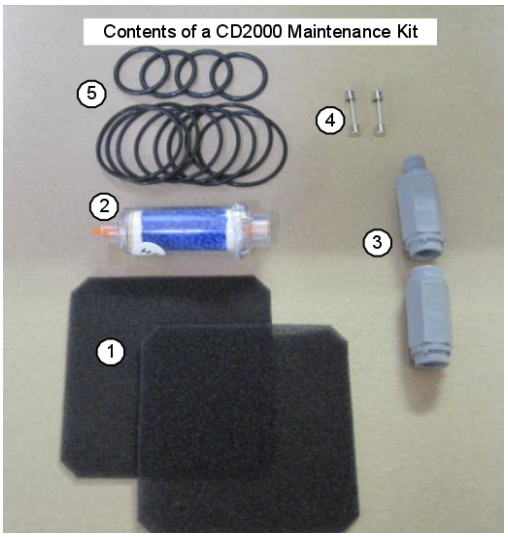

Maintenance Will Involve the Following:

1. **Cooling Filter:** Clean or replace the cooling fan filter elements as required.
2. **Inline Particulate Filter:** Remove colored protective caps before installing the new filter. Re-tape threads with Teflon tape. Orientation is universal.
3. **Check Valves:** Replace both check valves (one at the ozone generator and one at the injector). Make note of check valve direction before removing old check valve and reinstall new valve in same direction. Re-tape threads with Teflon tape.
4. **Fuses:** Save the replacement fuses for use as needed.
5. **Reaction Chamber O-Ring Replacement:** See page 2 for reaction chamber maintenance instructions.

Annual Maintenance Procedure

FOR USE WITH M1500, CD1500, P2000 & CD2000

Reaction Chamber Removal and Disassembly:

Note: Read through all the steps before disassembling the reaction chamber.

2" Reaction Chamber – Exploded View

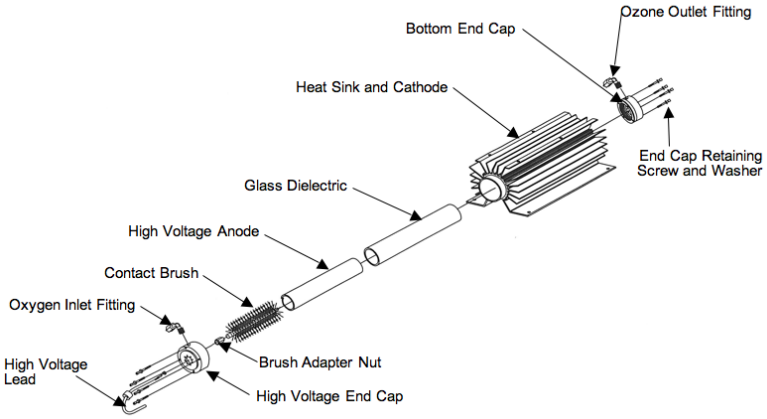

Step 1: Make sure all power to the ozone generator has been disconnected according to the "System Shutdown Procedures" outlined above.

Step 2: Disconnect the white high voltage lead from the black transformer, the black insulation boot will have to be drawn back to expose the connection.

Step 3: Disconnect the tubing connections on both ends of the reaction chamber.

Step 4: Remove the 4 nuts securing each chamber and remove the reaction chamber from ozone generator.

Step 5: Remove retaining screws and washers from the end caps (4 each).

Step 6: Using a gentle back-and-forth twisting motion, remove the non-high voltage end cap (the one *without* the high voltage attachment screw) from the heat sink/cathode assembly. A flat-head screwdriver may be used to gently pry the end cap off, as long as equal pressure is applied to each side of the end cap.

Step 7: Remove the high voltage end cap and dielectric from the heat sink/cathode assembly.

Step 8: Draw back the white cap along the white high voltage lead at the end cap, this will expose a screw to be removed. Pull/twist the end cap off the glass. Push the contact brush out of the dielectric glass. Also remove the anode (foil-like material) from within the glass, it may come out with the brush.

Step 9: Inspect the dielectric, foil, end caps and cathode for breakage, corrosion or debris; then follow the assembly and re-installation steps below.

Reaction Chamber Assembly and Re-installation:

Step 1: Remove o-rings from end caps, then clean the dielectric glass, end caps and interior of the stainless steel cathode cylinder. Use denatured alcohol and shop towels to clean the above components and be sure to remove all old o-ring debris. A 2" ball hone can be used to clean the major debris out of the cathode if there is heavy buildup. **Note:** If the brush's core is intact, but discolored, it is likely fine. The anode foil may also have been discolored from residual oil and heat, it will not require replacement. If there are ragged ends on the foil, trim them off (1/8"-1/4") with a pair of scissors.

Step 2: Prepare the end caps for re-assembly by replacing the o-rings. Attach the high voltage lead to the screw and install it onto the high voltage end cap. Thread the hex brush adapter nut, with contact brush attached, onto the interior of the high voltage end cap. Re-tape the threads of the elbow fittings if needed.

Step 3: Using a gentle twisting motion, press the *non*-high voltage end cap onto the heat sink/cathode assembly until flush with the heat sink cooling fins. Turn the end cap to the correct orientation.

Step 4: Slide the four end cap retaining screws with washers through the holes in the non-high voltage end cap, aligning them with the heat sink screw bosses. Thread screws into screw bosses until heads are snug against the end cap.

Step 5: Next we focus on assembling the rest of the subcomponents before installing them into the reaction chamber. Roll and insert the anode foil into the glass dielectric, center the anode foil in the glass. Secure the foil with a finger against the inside of the glass to keep it centered and insert the contact brush into the dielectric. Insure the foil is centered before fully seating the glass into the high voltage end cap. Clean the glass with denatured alcohol once more, and do not retouch the glass without re-cleaning.

Step 6: Hold the reaction chamber upright on a flat surface, empty side up. Grasp the high voltage end cap and lower the glass into the reaction chamber. Press directly downwards on the high voltage end cap to fully seat the dielectric assembly; the end caps should be flush with the heat sink cooling fins. Turn the end cap to the correct orientation.

Step 8: Slide the four end cap retaining screws with washers through the holes in the end cap, aligning them with the heat sink screw bosses. Thread screws into screw bosses until heads are snug against the end cap.

Step 9: Re-install the complete reaction chamber assembly into the ozone generator by securing the reaction chamber to its mounts, securing delivery line and connecting the high voltage insulated wire.

Annual Maintenance Procedure

FOR USE WITH M15/AD & CD15/AD

Maintenance of the ozone system is critical to its longevity and operating efficiency. Follow the steps below to perform the preventative annual maintenance. If you have additional questions regarding the maintenance of your ozone installation, please consult the operation manual or contact your dealer.

Before you start:

System Shutdown Procedures

Step 1: Turn off power to any peripheral system hydraulic components and air prep system.

Step 2: Turn the Main Power switch on the ozone generator to the "OFF" position. The LED display on the front cover should *not* be illuminated.

Step 3: Disconnect the power to the ozone system at the service disconnect box (if so equipped), main circuit breaker or by disconnecting the power cord.

Recommended Tools

Nut Drivers: 11/32", 3/8"
Screwdrivers: Phillips and flat-head
O-Ring Removal Pick
Hex Key: 7/64", 9/64"
Marking Pen
Wrench: 5/8" or adjustable
2" Ball hone (optional)
Channel lock-type Pliers
Snap Ring Pliers
Cloth Shop Towel
Denatured Alcohol
Scissors
Teflon Sealing Tape

Video Walkthroughs

Visit our video channel at:
http://www.youtube.com/ClearWaterTech
These, and other procedures are shown.

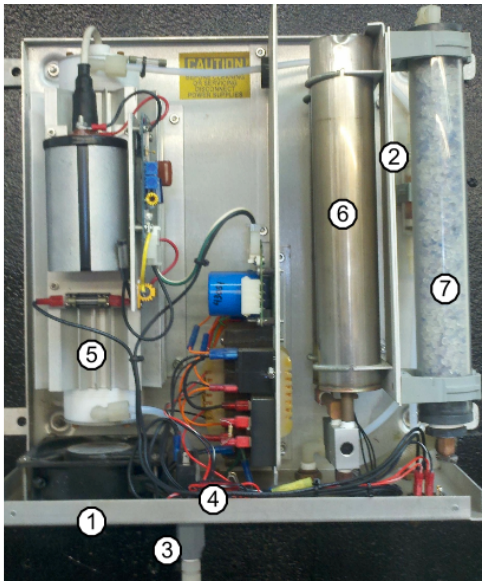

Included in this maintenance kit:

Pictured are overview images of the M15/AD and the contents of a M15/AD maintenance kit.

Numbered items correspond to descriptions below and their installed locations within the ozone generator.

M15/AD & CD15/AD systems will have the same maintenance kits and generator layouts. The difference between the systems are the drive systems and control options. Maintenance steps are the same.

Maintenance Will Involve the Following:

1. **Cooling Filter:** Clean or replace the cooling fan filter elements as required.
2. **Inline Particulate Filter:** Remove colored protective caps before installing the new filter. Re-tape threads with Teflon tape. Orientation is universal.
3. **Check Valves:** Replace both check valves, one at the ozone generator and one at the injector. Make note of check valve direction before removing old check valve and reinstall new valve in same direction. Re-tape threads with Teflon tape.
4. **Fuses:** Save the replacement fuses for use as needed.
5. **Reaction Chamber O-Ring Replacement:** See page 2 for reaction chamber maintenance instructions.
6. **Air Dryer Media:** See page 3 for air preparation maintenance instructions.
7. **Indicating Media:** See page 3 for air preparation maintenance instructions.

Annual Maintenance Procedure

FOR USE WITH M15/AD & CD15/AD

Reaction Chamber Removal and Disassembly:

Note: Read through all the steps before disassembling the reaction chamber.

Step 1: Make sure all power to the ozone generator has been disconnected according to the "System Shutdown Procedures" outlined above.

Step 2: Disconnect the white high voltage lead from the black transformer, the black insulation boot will have to be drawn back to expose the connection.

Step 3: Disconnect the tubing connections on both ends of the reaction chamber.

Step 4: If rebuilding a M15/AD: Disconnect wires from the drive module, you may leave it attached to the reaction chamber for this process.
If rebuilding a CD15/AD: Disconnect wire connections to the drive board and remove the 4-20mA control board with mounting bracket from the reaction chamber.

Step 5: Remove the 4 nuts securing the chamber and remove the reaction chamber from ozone generator.

2" Reaction Chamber – Exploded View

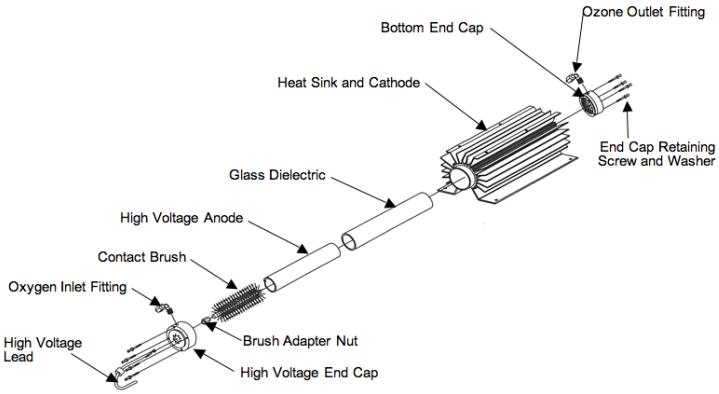

Step 6: Remove retaining screws and washers from the end caps (4 each).

Step 7: Using a gentle back-and-forth twisting motion, remove the non-high voltage end cap (the one *without* the high voltage attachment screw) from the heat sink/cathode assembly. A flat-head screwdriver may be used to gently pry the end cap off, as long as equal pressure is applied to each side of the end cap.

Step 8: Remove the high voltage end cap and dielectric from the heat sink/cathode assembly.

Step 9: Draw back the white cap along the white high voltage lead at the end cap, this will expose a screw to be removed. Pull/twist the end cap off the glass. Push the contact brush out of the dielectric glass. Also remove the anode (foil-like material) from within the glass, it may come out with the brush.

Step 10: Inspect the dielectric, foil, end caps and cathode for breakage, corrosion or debris; then follow the assembly and re-installation steps below.

Reaction Chamber Assembly and Re-installation:

Step 1: Remove o-rings from end caps, then clean the dielectric glass, end caps and interior of the stainless steel cathode cylinder. Use denatured alcohol and shop towels to clean the above components and be sure to remove all old o-ring debris. A 2" ball hone can be used to clean the major debris out of the cathode if there is heavy buildup. **Note:** If the brush's core is intact, but discolored, it is likely fine. The anode foil may also have been discolored from residual oil and heat, it will not require replacement. If there are ragged ends on the foil, trim them off (1/8"-1/4") with a pair of scissors.

Step 2: Prepare the end caps for re-assembly by replacing the o-rings. Attach the high voltage lead to the screw and install it onto the high voltage end cap. Thread the hex brush adapter nut, with contact brush attached, onto the interior of the high voltage end cap. Re-tape the threads of the elbow fittings if needed.

Step 3: Using a gentle twisting motion, press the *non*-high voltage end cap onto the heat sink/cathode assembly until flush with the heat sink cooling fins. Turn the end cap to the correct orientation.

Step 4: Slide the four end cap retaining screws with washers through the holes in the non-high voltage end cap, aligning them with the heat sink screw bosses. Thread screws into screw bosses until heads are snug against the end cap.

Step 5: Next we focus on assembling the rest of the subcomponents before installing them into the reaction chamber. Roll and insert the anode foil into the glass dielectric, center the anode foil in the glass. Secure the foil with a finger against the inside of the glass to keep it centered and insert the contact brush into the dielectric. Insure the foil is centered before fully seating the glass into the high voltage end cap. Clean the glass with denatured alcohol once more, and do not retouch the glass without re-cleaning.

Step 6: Hold the reaction chamber upright on a flat surface, empty side up. Grasp the high voltage end cap and lower the glass into the reaction chamber. Press directly downwards on the high voltage end cap to fully seat the dielectric assembly; the end caps should be flush with the heat sink cooling fins. Turn the end cap to the correct orientation.

Step 8: Slide the four end cap retaining screws with washers through the holes in the end cap, aligning them with the heat sink screw bosses. Thread screws into screw bosses until heads are snug against the end cap.

Step 9: Re-install the complete reaction chamber assembly into the ozone generator by securing the reaction chamber to its mounts, reinstalling the delivery line and connecting the drive board and high voltage insulated wires. For CD15/AD: Reinstall the 4-20mA control board with bracket, and reconnect disconnected wires. **Note:** Insure the black and red wires are reconnected to the proper slots to prevent damage to the 4-20mA control board.

Annual Maintenance Procedure

FOR USE WITH M15/AD & CD15/AD

Air Preparation System

The tan colored beads in the maintenance kit are an air dryer desiccant. The blue and white media is typically called indicating media. It is silica gel and acts as an indicator of the health of the air dryers.

If the air dryer desiccant requires replacement, moisture will be present in the dryer's output. The silica media will absorb the moisture and will change the blue crystals to pink, then white. If the indicating media has changed color, this maintenance of replacing the media should resolve the issue and restore proper ozone output. If the indicating media has yet to change color, it is recommended to replace the air dryer media for preventative maintenance. The indicating crystals can be saved for future use, or installed; it is optional in this case.

Air Dryer Desiccant Replacement

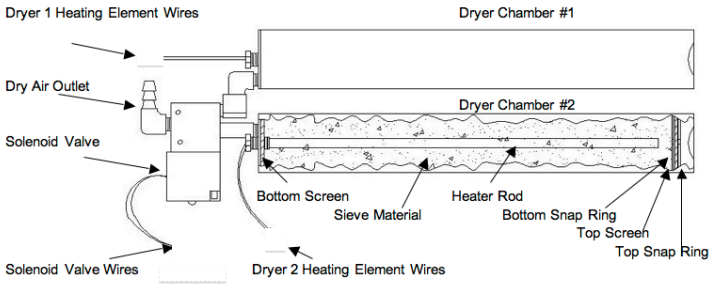

Note: You will need to remove the unit from the wall in order to pour out the media. Allow the air dryer chambers to cool completely and read all steps before continuing.

Step 1: Straighten out the ends of the dryer chambers using pliers.

Step 2: Using a snap ring tool, remove the top snap rings.

Step 3: Remove the top screens; the o-ring pick is handy for this. The bottom snap ring may be left remaining within the air dryer chambers.

Step 4: Turn the ozone generator over to pour the old sieve material from the dryer chambers and dispose. **Note:** When removing the sieve material, be sure not to discard the bottom screens.

Step 5: Re-seat/Re-install the bottom screens. **Note:** The heater rod must be put through the center of the bottom screens.

Step 6: Fill chamber with new sieve material to 3/4" to 1" below the top of the dryer chambers. You will have more media than needed.

Step 7: Re-install the top screens.

Step 8: Using a snap ring tool, place the top snap rings snug against the top screen.

Step 9: Bend the ends of the dryer chambers in-ward for added retention of the sieve material (optional).

Step 10: The ozone generator must be turned on for 24 hours prior to system start-up to eliminate any moisture trapped in the new sieve material.

Indicating Media Replacement

Step 1: Using wrench, loosen and disconnect the compression fitting located at the top of the indicating media chamber.

Step 2: With a flat-head screwdriver, unlock the two gray clamps securing the indicating media chamber.

Step 3: Pull the chamber free of the clamps, the chamber will only be held within the unit by the bottom cap. Rotate the chamber downwards to position the bottom cap to be at the top of the chamber.

Step 4: Secure the bottom cap with channel lock pliers and turn the chamber counter-clockwise to unscrew it. Be mindful to not spill the indicating media.

Step 5: Remove the indicating chamber from the unit, **remove the interior screen** and dispose of the media.

Step 6: Remove the Teflon tape from the bottom cap's threads and re-tape the threads with 2-3 wraps.

Step 7: Refill the indicating chamber with new blue and white indicating crystals. You will have more media than needed.

Step 8: Replace the interior screen and reinstall the chamber following steps 1 through 4 in reverse order.

Annual Maintenance Procedure

FOR USE WITH ECO1 & ECO2

Maintenance of the ozone system is critical to its longevity and operating efficiency. Follow the steps below to perform the preventative annual maintenance. If you have additional questions regarding the maintenance of your ozone installation, please consult the operation manual or contact your dealer.

Before you start:

System Shutdown Procedures

Step 1: Turn off power to any peripheral system hydraulic components and air prep system.

Step 2: Turn the Main Power switch on the ozone generator to the "OFF" position. The LED display on the front cover should *not* be illuminated.

Step 3: Disconnect the power to the ozone system at the service disconnect box (if so equipped), main circuit breaker or by disconnecting the power cord.

Recommended Tools

Nut Drivers: 5/16", 11/32"
Screwdrivers: Phillips and flat-head
O-Ring Removal Pick
Hex Key: 7/64"
Marking Pen
Wrench: 5/8" or adjustable
1" Ball hone (optional)
Cloth Shop Towel
Denatured Alcohol
Teflon Sealing Tape

Video Walkthroughs

Visit our video channel at:
http://www.youtube.com/ClearWaterTech
These, and other procedures are shown.

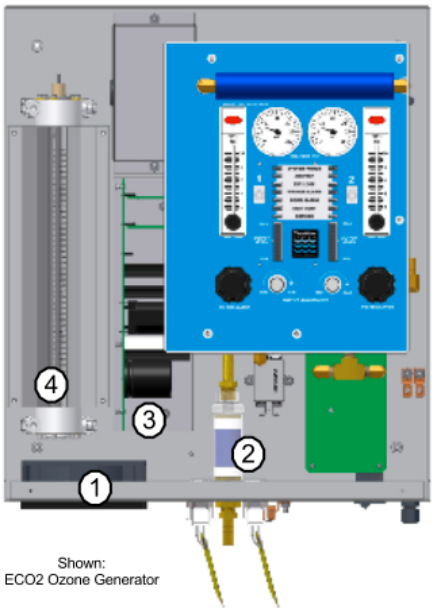

Shown:
ECO2 Ozone Generator

Included in this maintenance kit:

Pictured are the contents of an ECO2 maintenance kit and an overview image of the ECO2 ozone generator.

Numbered items correspond to descriptions below and their installed locations within the ozone generator.

ECO1 & ECO2 systems will have similar maintenance kits and generator layouts. They will have differences in quantity of parts, however the steps will be the same.

Maintenance Will Involve the Following:

1. **Cooling Filter:** Clean or replace the cooling fan filter elements as required.
2. **Inline Particulate Filter:** Remove colored protective caps before installing the new filter. Re-tape threads with Teflon tape. Orientation is universal.
3. **Fuses:** Save the replacement fuses for use as needed.
4. **Reaction Chamber O-Ring Replacement:** See page 2 for reaction chamber maintenance instructions.

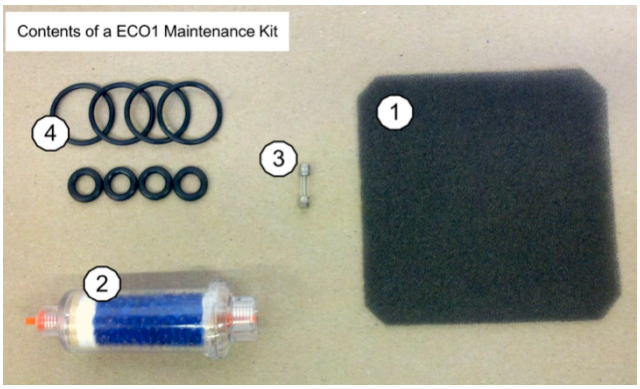

Annual Maintenance Procedure

FOR USE WITH ECO1 & ECO2

Reaction Chamber Removal and Disassembly:

Note: Read through all the steps before disassembling the reaction chamber.

Step 1: Make sure all power to the ozone generator has been disconnected according to the "System Shutdown Procedures" outlined above.

Step 2: Disconnect the high voltage lead from the reaction chamber(s).

Step 3: Disconnect the tubing connections on both ends of the reaction chamber(s).

Step 4: Remove the 4 nuts securing each chamber and remove the reaction chamber from ozone generator.

Step 5: Make note or mark the position of the end caps and their elbow fittings on the reaction chambers, during re-assembly the end caps will need to return to original positions.

1" Reaction Chamber - Exploded View

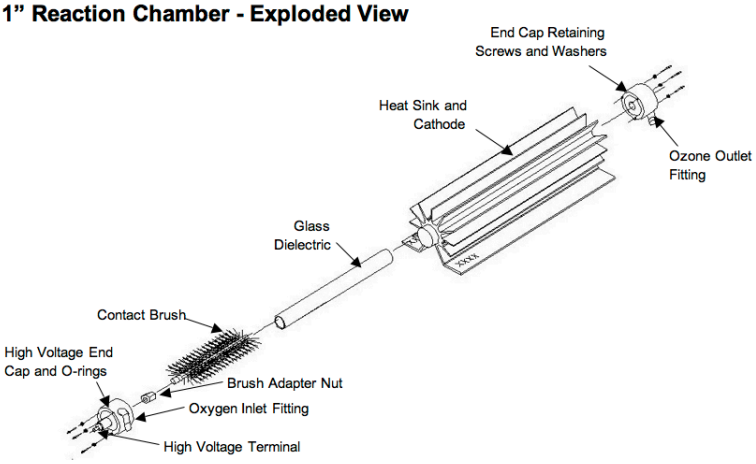

Step 6: Remove retaining screws and washers from the two end caps (3 each).

Step 7: Using a gentle back-and-forth twisting motion, remove the non-high voltage end cap (the one *without* the high voltage attachment screw) from the heat sink/cathode assembly. A flat-head screwdriver may be used to gently pry the end cap off, as long as equal pressure is applied to each side of the end cap.

Step 8: Remove the high voltage end cap and dielectric from the heat sink/cathode assembly.

Step 9: The high voltage end cap can be removed by holding the glass and turning the end cap counter-clockwise approximately 6 turns. Pull the end cap off the glass. Push the contact brush out of the dielectric glass. A screwdriver can be used to push the brush, and pliers to pull it out once the opposing end is exposed.

Step 10: Inspect the dielectric, end caps and cathode for breakage, corrosion or debris; then follow the assembly and re-installation steps below.

Reaction Chamber Assembly and Re-installation:

Step 1: Remove o-rings from end caps, clean the dielectric glass, end caps and interior of the stainless steel cathode cylinder. Use denatured alcohol, shop towels to clean and be sure to remove all old o-ring debris. A 1" ball hone can be used to clean the major debris out of the cathode if there is heavy buildup.

Step 2: Prepare the end caps for re-assembly by replacing the o-rings. Thread the hex brush adapter nut, with contact brush attached, onto the end of the high voltage end cap (cap with the high voltage attachment screw) center screw. Re-tape the threads of the elbow fittings if needed.

Step 3: Using a gentle twisting motion, press the *non*-high voltage end cap onto the heat sink/cathode assembly until flush with the heat sink cooling fins. Turn the end cap to the correct orientation.

Step 4: Slide the three end cap retaining screws with washers through the holes in the non-high voltage end cap, aligning them with the heat sink screw bosses. Thread screws into screw bosses until heads are snug against the end cap.

Step 5: Next we focus on assembling the rest of the subcomponents, before installing them into the reaction chamber. *Slowly* insert the brush (installed onto the high voltage end cap) into the dielectric glass. **Note:** Go slowly in order to prevent or minimize bending the center wire of the brush during this procedure. It is normal for the bristles to bend flat against the dielectric glass. Fully seat the dielectric glass into the high voltage end cap. Clean the glass with denatured alcohol once more, and do not retouch the glass without re-cleaning.

Step 6: Hold the reaction chamber upright on a flat surface, empty high voltage side up. Grasp the high voltage end cap and lower the glass into the reaction chamber. Press directly downwards on the high voltage end cap to fully seat the dielectric assembly; the end caps should be flush with the heat sink cooling fins. Turn the end cap to the correct orientation.

Step 8: Slide the three end cap retaining screws with washers through the holes in the end cap, aligning them with the heat sink screw bosses. Thread screws into screw bosses until heads are snug against the end cap.

Step 9: Re-install the complete reaction chamber assembly into the ozone generator by securing the reaction chamber to its mounts, securing delivery line and connecting the high voltage insulated wire.

Annual Maintenance Procedure

FOR USE WITH ECO3 & ECO4

Maintenance of the ozone system is critical to its longevity and operating efficiency. Follow the steps below to perform the preventative annual maintenance. If you have additional questions regarding the maintenance of your ozone installation, please consult the operation manual or contact your dealer.

Before you start:

System Shutdown Procedures

Step 1: Turn off power to any peripheral system hydraulic components and air prep system.

Step 2: Turn the Main Power switch on the ozone generator to the "OFF" position. The LED display on the front cover should *not* be illuminated.

Step 3: Disconnect the power to the ozone system at the service disconnect box (if so equipped), main circuit breaker or by disconnecting the power cord.

Recommended Tools

Nut Driver: 11/32"
Screwdrivers: Phillips and flat-head
O-Ring Removal Pick
Hex Key: 7/64"
Wrench: 5/8" or adjustable
2" Ball hone (optional)
Cloth Shop Towel
Denatured Alcohol
Scissors
Teflon Sealing Tape

Video Walkthroughs

Visit our video channel at:
http://www.youtube.com/ClearWaterTech
These, and other procedures are shown.

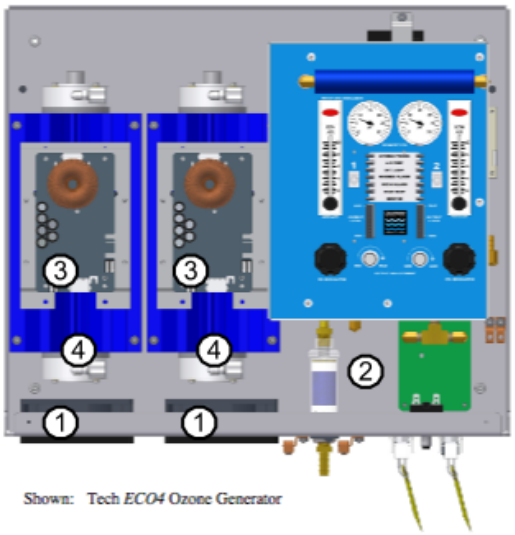

Shown: Tech *ECO4* Ozone Generator

Included in this maintenance kit:

Pictured are the contents of an ECO4 maintenance kit and an overview image of the ECO4 ozone generator.

Numbered items correspond to descriptions below and their installed locations within the ozone generator.

ECO3 & ECO4 systems will have similar maintenance kits and generator layouts. They will have differences in quantity of parts, however the steps will be the same.

Maintenance Will Involve the Following:

1. **Cooling Filter:** Clean or replace the cooling fan filter elements as required.
2. **Inline Particulate Filter:** Remove colored protective caps before installing the new filter. Re-tape threads with Teflon tape. Orientation is universal.
3. **Fuses:** Save the replacement fuses for use as needed.
4. **Reaction Chamber O-Ring Replacement:** See page 2 for reaction chamber maintenance instructions.

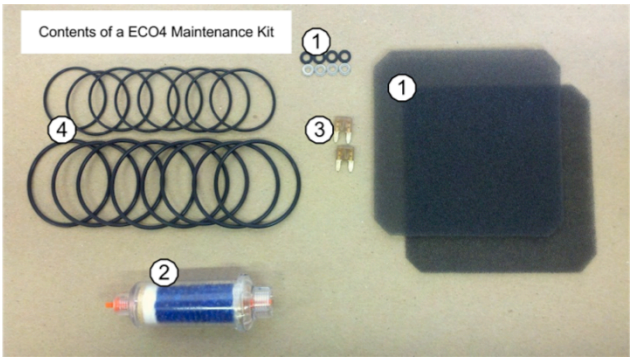

Annual Maintenance Procedure

FOR USE WITH ECO3 & ECO4

Reaction Chamber Removal and Disassembly:

2" Pressurized Reaction Chamber – Exploded View

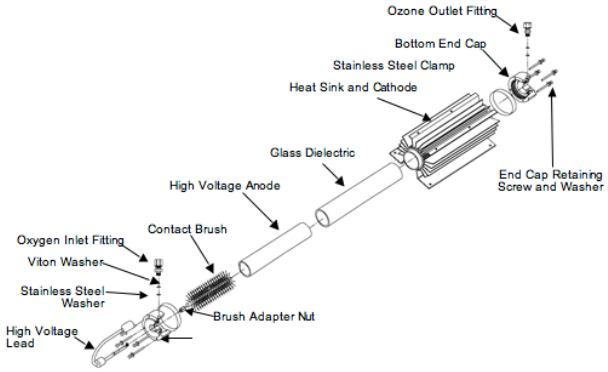

Note: Read through all the steps before disassembling the reaction chamber.

Step 1: Make sure all power to the ozone generator has been disconnected according to the "System Shutdown Procedures" outlined above.

Step 2: Disconnect the white high voltage lead from the black transformer, the black insulation boot will have to be drawn back to expose the connection.

Step 3: Disconnect the 3-wire plug and ribbon cable from the drive board mounted to the reaction chamber. The drive module can be removed from the reaction chamber by removing the 4 screws on the mounting plate. Removal of the drive module is recommended.

Step 3: Disconnect the tubing connections on both ends of the reaction chamber.

Step 4: Remove the 4 nuts securing each chamber and remove the reaction chamber from ozone generator. **Note:** The ECO4 will only have 3 nuts securing the right-side reaction chamber.

Step 5: Remove retaining screws and washers from the end caps (4 each).

Step 6: Using a gentle back-and-forth twisting motion, remove the non-high voltage end cap (the one *without* the high voltage attachment screw) from the heat sink/cathode assembly. A flat-head screwdriver may be used to gently pry the end cap off, as long as equal pressure is applied to each side of the end cap. **Note:** The stainless steel straps should not be removed.

Step 7: Remove the high voltage end cap and dielectric from the heat sink/cathode assembly.

Step 8: Draw back the white cap along the white high voltage lead at the end cap, this will expose a screw to be removed. Pull/twist the end cap off the glass. Push the contact brush out of the dielectric glass. Also remove the anode (foil-like material) from within the glass, it may come out with the brush.

Step 9: Inspect the dielectric, foil, end caps and cathode for breakage, corrosion or debris; then follow the assembly and re-installation steps below.

Reaction Chamber Assembly and Re-installation:

Step 1: Remove o-rings from end caps, then clean the dielectric glass, end caps and interior of the stainless steel cathode cylinder. Use denatured alcohol and shop towels to clean and be sure to remove all old o-ring debris. A 2" ball hone can be used to clean the major debris out of the cathode if there is heavy buildup. **Note:** If the brush's core is intact, but discolored, it is likely fine. The anode foil may also have been discolored from residual oil and heat; it will not require replacement. If there are ragged ends on the foil, trim them off (1/8"-1/4") with a pair of scissors.

Step 2: Prepare the end caps for re-assembly by replacing the o-rings and replacing the Viton washers installed under the elbow fittings.

Notes: A small amount of dielectric silicon lubricant can be used on the o-rings, cathode and/or dielectric glass to make installation easier.

When replacing washers under the elbow fittings, the stainless steel washer is installed first, then the Viton washer. Re-tape the elbow fittings. The stainless steel elbow fitting is used on the non-high voltage (bottom) end cap.

Attach the high voltage lead to the screw and install it onto the high voltage end cap. Thread the hex brush adapter nut, with contact brush attached, onto the interior of the high voltage end cap.

Step 3: Using a gentle twisting motion, press the *non*-high voltage end cap onto the heat sink/cathode assembly until flush with the heat sink cooling fins. Turn the end cap to the correct orientation.

Step 4: Slide the four end cap retaining screws with washers through the holes in the non-high voltage end cap, aligning them with the heat sink screw bosses. Thread screws into screw bosses until heads are snug against the end cap.

Step 5: Next we focus on assembling the rest of the subcomponents before installing them into the reaction chamber. Roll and insert the anode foil into the glass dielectric, center the anode foil in the glass. Secure the foil with a finger against the inside of the glass to keep it centered and insert the contact brush into the dielectric. Insure the foil is centered before fully seating the glass into the high voltage end cap. Clean the glass with denatured alcohol once more, and do not retouch the glass without re-cleaning.

Step 6: Hold the reaction chamber upright on a flat surface, empty side up. Grasp the high voltage end cap and lower the glass into the reaction chamber. Press directly downwards on the high voltage end cap to fully seat the dielectric assembly; the end caps should be flush with the heat sink cooling fins. Turn the end cap to the correct orientation.

Step 7: Slide the four end cap retaining screws with washers through the holes in the end cap, aligning them with the heat sink screw bosses. Thread screws into screw bosses until heads are snug against the end cap.

Step 8: Re-install the complete reaction chamber assembly into the ozone generator by securing the reaction chamber to its mounts, securing delivery line, remounting the drive module (if removed), reconnecting of the 3-wire plug and cable and connecting the high voltage insulated wire.

DIELECTRIC INSTALLATION INSTRUCTIONS

RCC71SA, RCC73SA and RCC76SA

1" Reaction Chamber, See Figure 1. 2" Reaction Chambers (Vacuum and Pressurized), See Figure 2

Step 1: Make sure the glass dielectric is clean (free of dust, dirt, grease, oils, etc.).

Step 2: Clean and hone the reaction chamber cathode.

Step 3: Prepare the end caps for re-assembly by cleaning the end caps and replacing the O-rings. Thread the hex brush adapter nut, with contact brush attached, onto the end of the high voltage end cap (2" RC: end cap with the high voltage white power lead attached. 1" RC: end cap with the high voltage attachment screw) center screw. **Note: Do not remove the stainless steel clamp from the pressurized reaction chamber end caps.**

Step 4: Using a gentle twisting motion, press the *non*-high voltage end cap onto the heat sink/cathode assembly until flush with the heat sink cooling fins. **Note: The end cap must be orientated correctly on the heat sink/cathode assembly.**

Step 5: Slide the end cap retaining screws through the holes in the non-high voltage end cap, aligning them with the heat sink screw bosses. Thread screws into screw bosses until heads are snug against the end cap.

Step 6: **1" Reaction Chamber Only:** *Slowly* insert the brush (installed onto the high voltage end cap) into the dielectric glass. **Note:** Go slowly in order to prevent or minimize bending the center wire of the brush during this procedure. It is normal for the bristles to bend flat against the dielectric glass. Fully seat the dielectric glass into the high voltage end cap. Clean the glass with denatured alcohol once more, and do not retouch the glass without re-cleaning.

2" Reaction Chamber Only: Roll the high voltage anode (foil-like material) lengthwise, preserving the *longer* dimension. Insert the rolled anode into the dielectric glass. Center the anode in the dielectric glass (approximately 1/2" from either end of the glass), making sure it is rolled squarely. Secure the anode with a finger against the inside of the glass and insert the contact brush into the dielectric. Insure the anode is centered before fully seating the glass into the high voltage end cap. Clean the glass with denatured alcohol once more, and do not retouch the glass without re-cleaning.

Step 7: Hold the reaction chamber upright on a flat surface, empty side up. Grasp the high voltage end cap and lower the glass into the reaction chamber. Press directly downwards on the high voltage end cap to fully seat the dielectric assembly; the end caps should be flush with the heat sink cooling fins. Turn the end cap to the correct orientation.

Step 8: Slide the end cap retaining screws through the holes in the end cap, aligning them with the heat sink screw bosses. Thread screws into screw bosses until heads are snug against the end cap.

Step 9: Re-install complete reaction chamber assembly into the ozone generator.

1" Reaction Chamber Exploded View
Figure 1

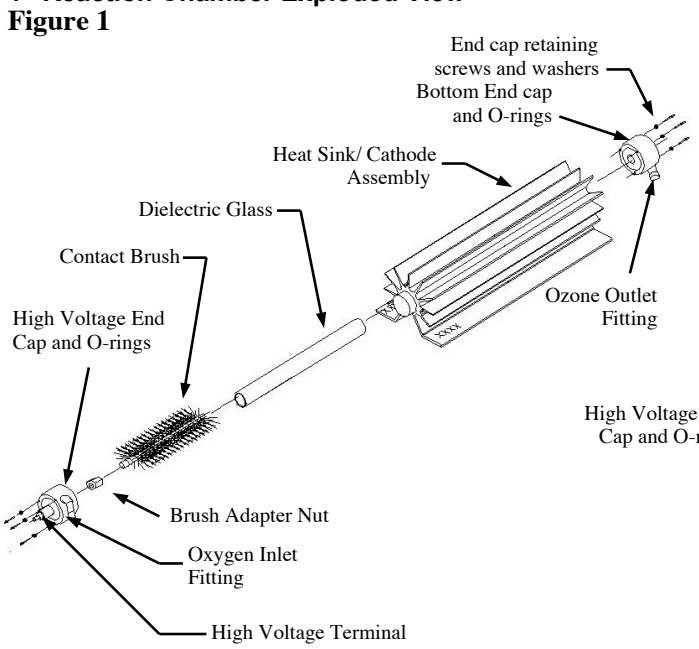

2" Reaction Chamber Exploded View
Figure 2

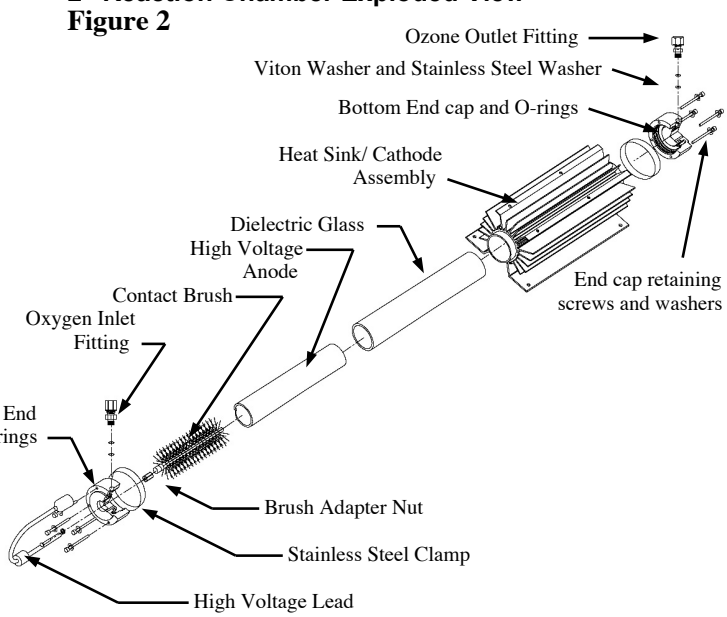

Shown: 2" Pressurized Reaction Chamber. Note: Viton washers, Stainless Steel washers and Stainless Steel Clamps are not used with the 2" Vacuum Reaction Chamber

ClearWater Tech, LLC.
1.800.262.0203 • 805.549.9724
850-E Capitolio Way, San Luis Obispo, CA 93401 • email: service@cwtozone.com • www.cwtozone.com

Replacement Reaction Chamber Installation Guide

FOR ALL 2” VERSION REACTION CHAMBERS

Before you start:

System Shutdown Procedures

Step 1: Turn off power to any peripheral system hydraulic components and air prep system.

Step 2: Turn the Main Power switch on the ozone generator to the “OFF” position.

Step 3: Disconnect the power to the ozone system at the service disconnect box (if so equipped), main circuit breaker or by disconnecting the power cord.

Recommended Tools

Nut Driver: 11/32”,
Wrenches: 5/8”, 9/16”, or adjustable
Screwdrivers: Phillips and flat-head
Wire cutters/strippers
Crimpers
Pliers

Video Walkthroughs

Visit our video channel at:
http://www.youtube.com/ClearWaterTech
These, and other procedures are shown.

Included with the reaction chamber:

Pictured on the right are the connectors and insulating boot included with your reaction chamber. Only one of the two connectors will be used.
Examine the connectors of your original reaction chamber to verify which connector you will be using. If you will be using the brass connector, remove the tabs of the brass connector with a pair of pliers as pictured.

Installation steps:

1. **Disconnect Power:** Follow the System Shutdown Procedures above.
2. **Disconnect Old Chamber:** Pull back the black insulating boot currently installed on your white high voltage (HV) wire. Disconnect the high voltage lead wire from transformer. Next, unscrew the compression fittings at the top and bottom of the original reaction chamber.
3. **Unbolt Reaction Chamber:** Remove the 4 Kep-nuts (11/32”) from the corners of the reaction chamber and remove the reaction chamber from the chassis.
4. **Trim New Wire Length:** Prepare the replacement reaction chamber by cutting the white HV wire to the proper length. Use the original reaction chamber or the pictures to the right as a sample. A short, smooth arc is optimal.
5. **Attach Connectors to HV Wire:** *First slide the insulation boot onto the HV wire.* Strip the HV wire and crimp on the new connector. See pictures for assistance.
   - When using the ring connector, be sure to strip wire back about a 1/4" to ensure a good crimp connection.
   - When using the brass connector, be sure to strip wire back about a 1/2", fold exposed wire over outside of white Teflon sheathing, and place solid side of brass connector to ensure a good crimp connection.

   Note: *Do not remove the high voltage wire screw* installed into the reaction chamber end cap. If this is removed, the reaction chamber will have to be disassembled and reassembled, insuring the screw is threading into the brush running the length of the chamber. See the maintenance instructions in the manual for steps.
6. **Install New Chamber:** Place new chamber in chassis and secure with previous Kep-nuts.
7. **Connect New Chamber:** Connect inlet air and ozone tubing to reaction chamber.
8. **Connect High Voltage Wire:** Install the white high voltage wire. *Insure the wire does not come in contact with metallic surfaces within the unit.* Slide insulation boot to cover connection point.

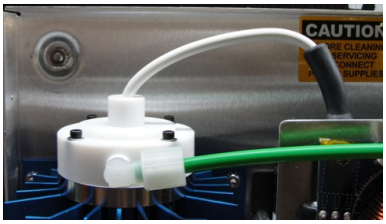

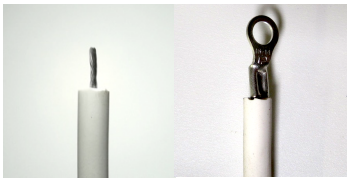

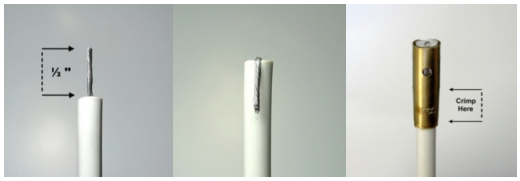

ClearWater Tech, LLC.
Toll Free: 800.262.0203 • Ph: 805.549.9724 • Fax: 805.549.0306
850-E Capitolio Way, San Luis Obispo, CA 93401 • email: service@cwtozone.com • www.cwtozone.com

LIT350 091713

1” Vacuum Operated Reaction Chamber

FIND#	QTY.	PART#	DESCRIPTION
1	1	RCC250	CD Chamber, 1”, Heat sink and S.S. Cathode
2	1	RCC76	Dielectric Assembly, 1" Reaction Chamber
3	1	RCC57	Teflon End Cap Assembly 1” Non High Voltage
4	1	RCC53	Teflon End Cap Assembly 1” High Voltage
5	1	HWNO97	Nut, 5/16 High Voltage Adaptor, Brush Nut
6	1	HWSO03	Stand off, 1/2" x 3/4" Nylon
7	1	ORS50	O-Ring Set
8	6	HWS2009	Hardware Screw, #6-32 x 1 1/4 SHCS Black Alloy
9	2	CWT30001	Washer, Grammar End Cap Retaining Washer
10	1	HTS321	Hardware, Threaded Stud 6-32 x 1- 3/4” Stainless
11	2	FTK325	Fitting, 1/8” MPT x 1/4” comp 90º Elbow, Rynar

ENLARGED VIEW – 1” VACUUM OPERATED REACTION CHAMBER

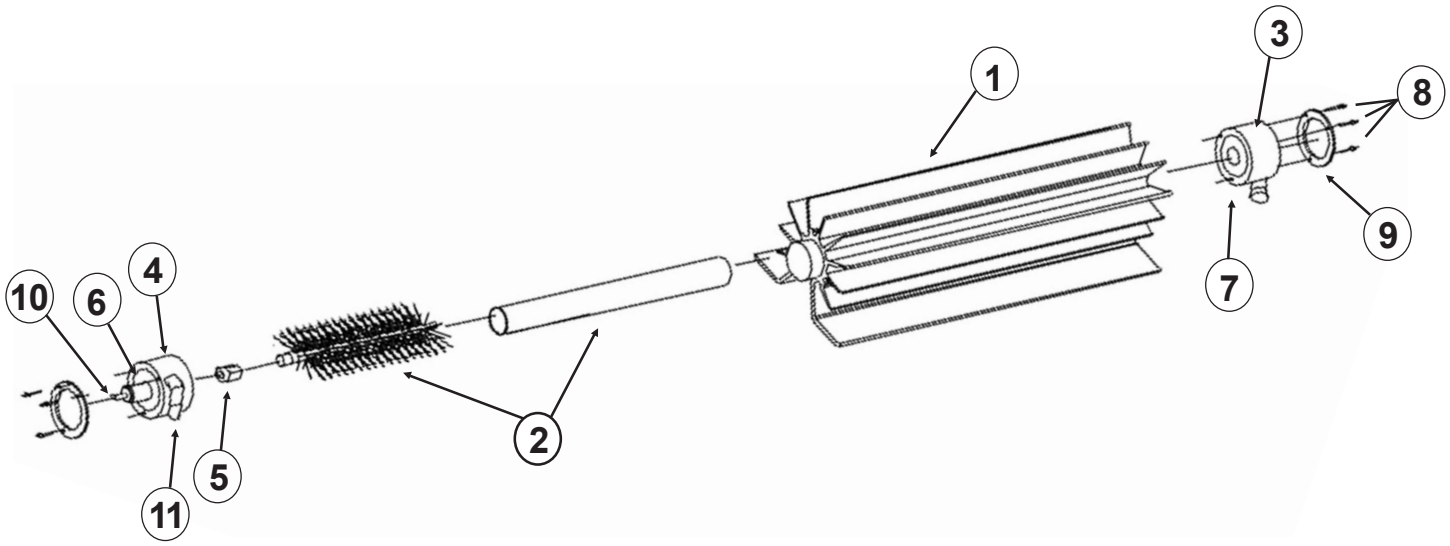

2” Vacuum Operated Reaction Chamber

FIND#	QTY.	PART#	DESCRIPTION
1	1	RCC200	CD Chamber, 2", Heatsink and S.S. Cathode Assembly
2	1	RCC73	Dielectric Assembly, 2” Vacuum Operated Reaction Chamber Anode (REV’s 2, 3, 4)
3	1	RCC107	Teflon End Cap Assembly, 2" Non High Voltage, Vacuum Operated Reaction Chamber
4	1	RCC102	Teflon End Cap Assembly, 2" High Voltage, Vacuum Operated Reaction Chamber
5	1	HWNO97	Nut, 5/16 High Voltage Adaptor, Brush Nut
6	1	RCC120	H.V. Lead Cap, 2" Reaction Chamber, Teflon
7	1	RCC85	H.V. Lead, 2" Reaction Chamber
8	1	ORS30	O-Ring Set
9	8	HWS2012	Screw, #6-32 x 2” Long, SHCS Black Alloy
10	8	HWW9003	Washer, Flat Brass, #6
11	1	HWS2006	Screw, #6-32 x 3/4 Pan Phil, S.S.

ENLARGED VIEW – 2” REACTION CHAMBER

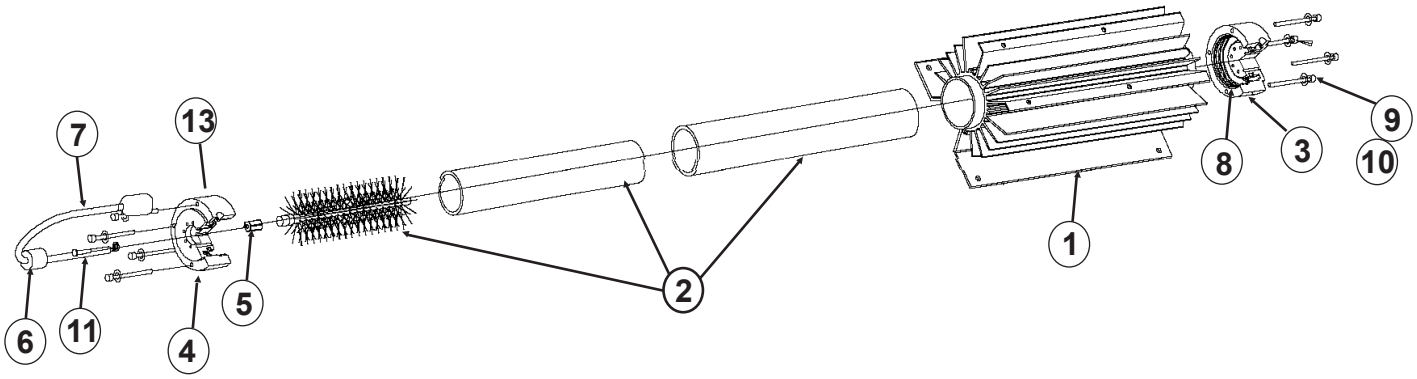

2” Pressure Operated Reaction Chamber

FIND#	QTY.	PART#	DESCRIPTION
1	1	RCC210	CD Chamber, 1”, Heat sink & S.S. Cathode
2	1	RCC71	Dielectric Assembly for 2" Pressure Operated Reaction Chamber
3	1	RCC115	Teflon End Cap Assembly 2” Non High Voltage, Pressure Operated Reaction Chamber
4	1	RCC110	Teflon End Cap Assembly 2” High Voltage, Pressure Operated Reaction Chamber
5	1	HWNO97	Nut, 5/16 High Voltage Adaptor, Brush Nut
6	1	RCC120	H.V. Lead Cap, 2" Reaction Chamber, Teflon
7	1	RCC85	H.V. Lead, 2" Reaction Chamber
8	1	ORS40	O-Ring Set
9	8	HWS2012	Screw, #6 - 32 x 2" Long, SHCS Black Alloy
10	8	HWW9003	Washer, Flat Brass, #6
11	1	HWS2006	Screw, #6 - 32 x 3/4" Pan Phil, S.S.
12	2	WRT16	Stainless Steel Clamp
13	1	FTK320	Fitting, 1/8" mpt x 1/4" comp, Kynar
14	1	FTS325	Fitting, 1/8" mpt x 1/4" comp, S.S.
15	2	HWW08001	Washer, Flat S.S., 1/4"
16	2	HSW100	Washer, Flat Viton, 1/4"

***NOTE: Inlet and outlet fitting will differ with unit.**

ENLARGED VIEW – 2” PRESSURE OPERATED REACTION CHAMBER

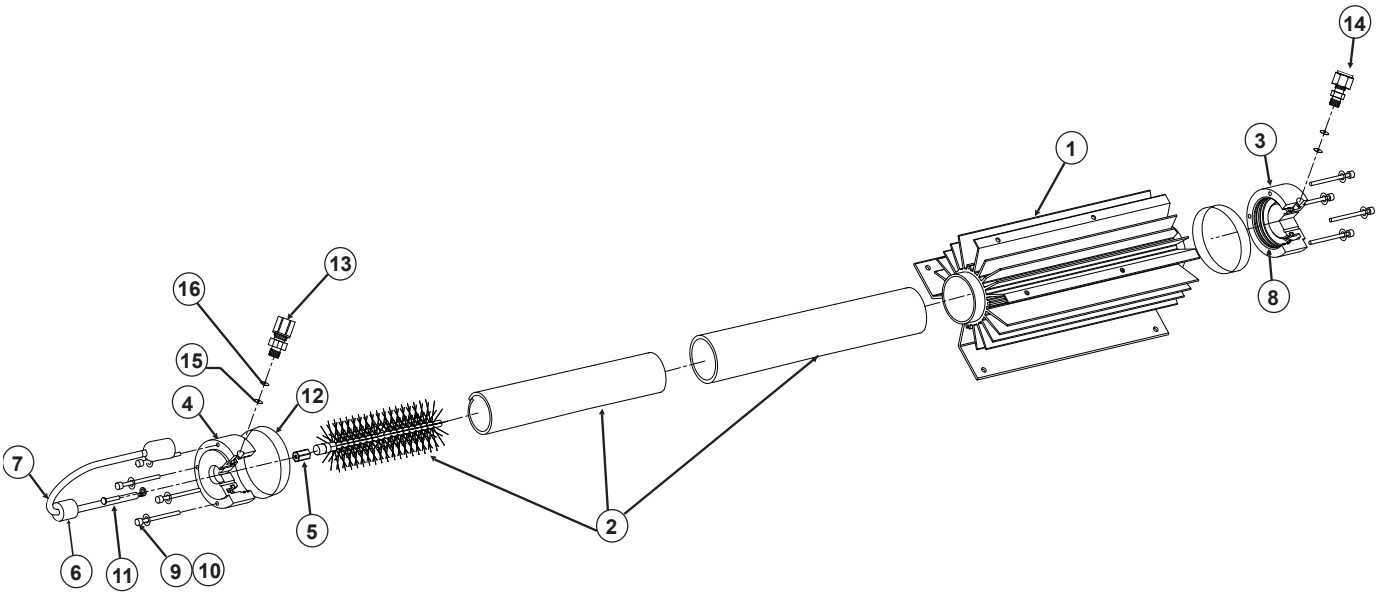

Maintenance Kits

Maintenance of ClearWater Tech ozone systems is critical to longevity and operating efficiency. While all system components are built to provide years of reliable service, minimum maintenance is strongly recommended.

MAINTENANCE KITS

ClearWater Tech also provides complete maintenance kits, which include all parts required for routine annual maintenance of all individual ozone generators and related equipment.

Important: With a commitment to providing the most technologically advanced products available, some important design changes have been made to our products. These modifications have affected the parts that are included in our maintenance kits. To insure you receive the maintenance kit that is correctly matched to the equipment being serviced, match the model and serial number of your unit with the part number below. If you need help to find the correct kit, please have the serial number and model number available and contact the ClearWater Tech Service Department.

Part Number	*Catalog Description*
ASP100	Maintenance kit - UV2800, unsealed lamp
ASP102	Maintenance kit - UV2800, sealed lamp
ASP110A	Maintenance kit - CD10AD, SN 96284 - 31443 to 98296 - 42597
ASP110B	Maintenance kit - CD10AD, SN 98307 - 42858 to current
ASP111A	Maintenance kit - CD10, SN 96242 - 30824 to 98156 - 40612
ASP111B	Maintenance kit - CD10, SN 98348 - 43643 to current
ASP112	Maintenance kit - CD12, SN 98300 - 42710 to current
ASP120A	Maintenance kit - M15AD, SN 95144 - 25996 to 97336 - 37590
ASP120B	Maintenance kit - M15AD and CD15AD, SN 97342 - 37687 to 99146 – 46043
ASP120C	Maintenance kit - M15AD and CD15AD, SN 99179 - 46783 to 99242 - 47949
ASP120D	Maintenance kit - M15AD and CD15AD, SN 99242 - 47950 to current
ASP125A	Maintenance kit - M1500, SN 95137 - 25905 to 97342 - 37718
ASP125B	Maintenance kit - M1500 and CD1500, SN 98019-38128 to 99155 - 46101
ASP125C	Maintenance kit - M1500 and CD1500, SN 99173 - 46692 to 01278 - 62928
ASP125D	Maintenance kit - M1500 and CD1500, SN 01344 - 64102 to current
ASP128A	Maintenance kit - P2000, SN 95164 - 26257 to 97336 - 37584
ASP128B	Maintenance kit - P2000 and CD2000, SN 97338 - 37653 to 99125 – 45732
ASP128C	Maintenance kit - P2000, SN 99218 - 47552 to 01045 - 59325
ASP128D	Maintenance kit - CD2000, SN 99172 - 46527 to 01352 - 64339
ASP128E	Maintenance kit - P2000, SN 01117 - 60608 to current
ASP128F	Maintenance kit - CD2000, SN 02018 - 64638 to current
ASP140A	Maintenance kit - M15/O2, SN 95151 - 26023 to 97231 - 35630
ASP140B	Maintenance kit - M15/O2, SN 98127 - 40042 to 99104 - 45444
ASP140C	Maintenance kit - M15/O2 and CD15/O2, SN 99260 - 48597 to 01344 - 64104
ASP140D	Maintenance kit - M15/O2 and CD15/O2, SN 02029 - 64774 to current
ASP156A	Maintenance kit - P20/O2, SN 95198 - 26597 to 97302 - 36897
ASP156B	Maintenance kit - P20/O2, SN 97350 - 37805 to 98114 - 39791
ASP156C	Maintenance kit - P20/O2 and CD20/O2, SN 98188 - 41025 to 99125 - 45725
ASP156D	Maintenance kit - P20/O2, SN 99218 - 47560 to 01045 - 59306
ASP156E	Maintenance kit - CD20/O2, SN 99328 - 50208 to 01345 - 64143
ASP156F	Maintenance kit - P20/O2, SN 01135 - 60978 to 01352 - 54334
ASP156G	Maintenance kit - P20/O2 and CD20/O2, SN 02018 - 64646 to current
ASP160A	Maintenance kit - CD4000, SN 95164 - 26254 to 97328 - 37406
ASP160B	Maintenance kit - CD4000 and CD4000HO, SN 97339 - 37679 to 99047 - 44465
ASP160C	Maintenance kit - CD4000 and CD4000HO, SN 99169 - 46526 to 00301 - 57595
ASP160D	Maintenance kit - CD4000 and CD4000HO, SN 01046 - 59333 to current
ASP165	Maintenance kit - CD4000P, SN 03251 - 79707 to current
ASP176A	Maintenance kit - CD6000 and CD6000HO, SN 95234 - 27138 to 97300 - 36847
ASP176B	Maintenance kit - CD6000 and CD6000HO, SN 97364 - 37935 to 98092 - 39520
ASP176C	Maintenance kit - CD6000 and CD6000HO, SN 00168 - 54430 to 00176 - 54489
ASP176D	Maintenance kit - CD6000 and CD6000HO, SN 00340 - 58489 to current

Part Number	*Catalog Description*
ASP180A	Maintenance kit - CD8000, SN 95215 - 26888 to 97259 - 35912
ASP180B	Maintenance kit - CD8000 and CD8000HO, SN 97343 - 37728 to 99112 - 45648
ASP180C	Maintenance kit - CD8000 and CD8000HO, SN 99188 - 46850 to 00263 - 56601
ASP180D	Maintenance kit - CD8000 and CD8000HO, SN 01029 - 59139 to current
ASP240A	Maintenance kit - CD12000, SN 95171 - 26287 to 972925 - 36765
ASP240B	Maintenance kit - CD12000, CD12000HO, SN 97309 - 37011 to 99141 - 45966
ASP240C	Maintenance kit - CD12000, CD12000HO, SN 99204 - 47277 to 00250 - 56279
ASP240D	Maintenance kit - CD12000, CD12000HO, SN 00332 - 58194 to current
ASP280A	Maintenance kit - AD40, SN 95151 - 26036 to current
ASP285	Maintenance kit - OXS400 and OXS430, SN 03247 - 79581 to current
ASP290A	Maintenance kit - OXS500 and OXS505, SN 00356 - 58783 to 01081 - 60119
ASP290B	Maintenance kit - OXS500 and OXS505, SN 02248 - 70590 to current
ASP291A	Maintenance kit - OXS510 and OXS512, SN 00084 - 52958 to 01267 - 62855
ASP291B	Maintenance kit - OXS510 and OXS512, SN 02189 - 69577 to current
ASP292A	Maintenance kit - OXS515 and OXS520, SN 00146 - 54121 to 01331 - 63965
ASP292B	Maintenance kit - OXS515 and OXS520, SN 02112 - 66370 to current
ASP80	Maintenance kit - OXS80's, OXS90's, SeQual SN 10001 to 10070, CWT SN 02077 - 65443
ASP85A	Maintenance kit - OXS100's, SeQual SN 10001 to 42223
ASP85B	Maintenance kit - OXS100's, SeQual SN 10520 to 10536, CWT SN 02072 - 65274 to current
ASP86	Maintenance kit - PDA20's and PSA60's, SN 02039 - to current
ASP90A	Maintenance kit - PRO10, PRO12 and PRO14, SN 95296 - 27735 to current
ASP95A	Maintenance kit - POE10, SN 97010 - 32309 to 98195 - 41143
ASP95B	Maintenance kit - POE10, SN 99075 - 45037 to current
ASP96A	Maintenance kit - POE15, SN 97101 - 33502 to 97335 - 37563
ASP96B	Maintenance kit - POE15, SN 97353 - 37864 to 98314 - 43016
ASP96C	Maintenance kit - POE15 and POE20, SN 99179 - 46792 to current
ASPHD10A	Maintenance kit - HDO3-I, SN 01222 - 62440 to current
ASPHD20A	Maintenance kit - HDO3-II, SN 02046 - 65069 to current
ASPHD30A	Maintenance kit - HDO3-III, 02126 - 66832 to current
ASPM246A	Maintenance kit - CD1500P, SN 02254 - 70674 to current
ASPP246A	Maintenance kit - CD2000P, SN 02085 - 65574 to current
ASPHD20A	Maintenance kit - CD30nx, SN C279159 to current
ASPP246A	Maintenance kit - CD15nx, SN C286224 to current

Note: Replacement lamps for our H.V.A.C. air purification units and Ultraviolet ozone generators are also available. Please have the serial number available.

Ultraviolet Lamp Selection Guide

When service is needed for your UV ozone system, usually it's only the lamp needs to be replaced. The ballast that powers the lamp is typically fine and can last a number of years before showing any signs of wear.

Below is a list of the common lamps that are used in our UV systems.

Note: If your lamp does not have any of the part IDs listed in this chart, you will need to refer to the model of generator or the lamp descriptions.

Generator Model	Part ID	UV Type	End Cap Color	# of Pins	Lamp Length (with pins)	Lamps Per Unit
AirWaves™	LAHV90L	Ozone	White	4	10 1/4″	1
	LAHV91	Germicidal	White	4	14 1/4″	1
AirWaves™ (old)	LAHV90*	Ozone	White	4	8 1/4″	1
	LAHV95*	Germicidal	Yellow	4	14 1/4″	1
ComAir20T™	LA15	Ozone	White	4	17 1/2″	1
	LAHV92	Germicidal	White	4	14 1/8″	1
Airwaves™ Mistral	LAHV98	Germicidal	Purple	4	14 1/4″	1
MZ250	LA40	Ozone	White	4	8 1/2″	1
S1200 (unsealed)	LA15	Ozone	White	4	17 1/2″	1
S1200 (sealed)	LA20**	Ozone	White	4	17 1/2″	1
CS1400 (unsealed)	LA25	Ozone	White	4	29″	1
CS1400 (sealed)	LA30**	Ozone	White	4	29″	1
UV2800 (unsealed)	LA28	Ozone	White	4	29″	1
UV2800 (sealed)	LA30**	Ozone	White	4	29″	1
UV10	LA10	Sterilizer	White	1 per end	14 3/4″	1
UV30	LA35	Sterilizer	White	1 per end	33 3/4″	1
UV60	LA35	Sterilizer	White	1 per end	33 3/4″	1
ZAP	LA40	Ozone	White	4 pins	8 1/2″	1

* These lamps are used for older versions of the Airwaves™ HVAC air purifier. Part number HVRK276 is an upgrade kit that can be purchased to bring the unit to the current version; the kit includes new lamps.

** On older versions of these sealed units, there is no indication on the data plate of the unit that tells you that the unit contains a sealed version of lamp. You can determine if your lamp is a sealed lamp by simply removing the lamp looking for a clear sleeve on the bottom end cap near the pins. See photo below.

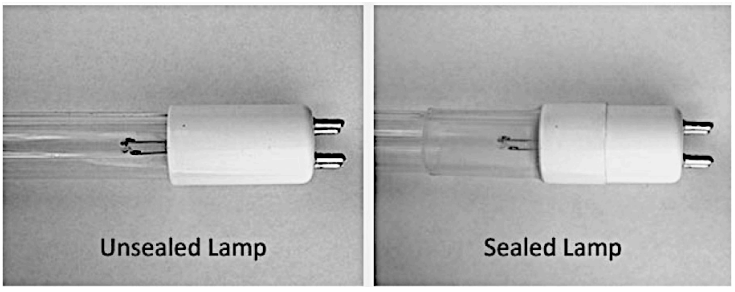

CWT External Loop Interface

CWT External Loop (EXT LOOP):
The external loop is a true dry contact interface designed to allow main power of the ozone generator to remain "ON" while only energizing or de-energizing the ozone reaction chamber(s). **Note: The term 'dry contact' means that this loop does not supply output nor except input voltages. Warning: Supplying voltage to the external loop will cause damage to the ozone generator and void warranty.** Under normal operation the external loop will effectively interrupt the ozone output when the loop has lost continuity. When continuity through the external loop is restored ozone output will continue.

The function of the external loop, a removable two-position plug with a white 18AWG wire is to interface the ozone generator to any control device, i.e., pressure switch, vacuum switch, flow switch, float switch, ORP controller, PPM controller, ambient ozone monitor or timer. To interface a control device to the external loop, cut the white 18AWG wire in half. Connect the control device to each leg of the external loop. **Note: External Loop control devices supplied by CWT may come equipped with a two-position male connector ready to be plugged into the female two-position connector mounted to the chassis of the ozone generator.** If the control device used supplies an output voltage a single pole single throw (SPST) normally open relay may be used to create a dry contact interface (see diagram below), **Note: Attached to the white 18 AWG external loop is a warning, "THIS CONNECTION IS A DRY CONTACT ONLY, DO NOT APPLY VOLTAGE".**

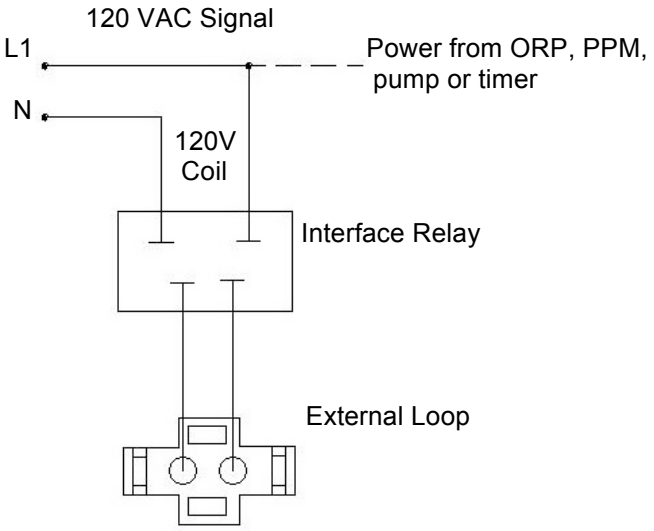

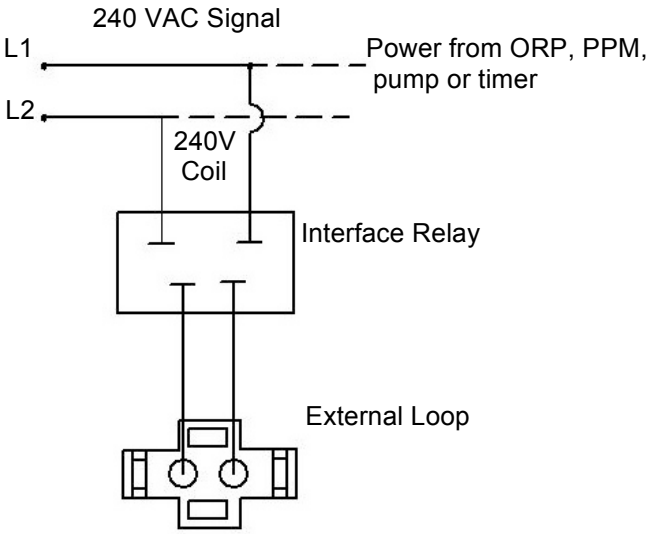

Miniseries Ozone Generator LED Display

The ClearWater Tech CD10 Series ozone generators are equipped with a LED display for simplicity of checking operational status. This chart provides information regarding the function of each LED. For further information regarding CWT equipment please contact our Service department.

LED	Function
OZONE OUTPUT	The ten LEDs represent 0-100%, minimum to maximum ozone output. Each LED is equal to 10% output. These LEDs can be adjusted with the manual output control knob located at the bottom of the ozone generator or automatically with a remote 4-20mA control signal.
POWER	Main Power is "ON" to the ozone generator, when LED is illuminated.
HV DRIVE	Power is being sent to the high voltage drive board, when the LED is illuminated.
EXT LOOP	The External Loop has continuity through it when the LED is *not* illuminated, which indicates ozone is being produced. The External Loop *does not* have continuity, when the LED is illuminated, which indicates no ozone production.
HIGH TEMP	The High Temp LED will not be illuminated during normal operation. If the ozone generator's internal temperature is in excess of 150˚F the High Temp LED will illuminate, which will also discontinue ozone production.
AIR PREP	CD10/AD and CD12/AD Only: The Dryer Timer LED will flash continuously during normal operation and indicates that the dryer timer cycle is operating correctly.
DRYER 1	CD10/AD and CD12/AD Only: DRYER 1 LED will be illuminated when dryer chamber 1 is heating.
DRYER 2	CD10/AD and CD12/AD Only: DRYER 2 LED will be illuminated when dryer chamber 2 is heating.

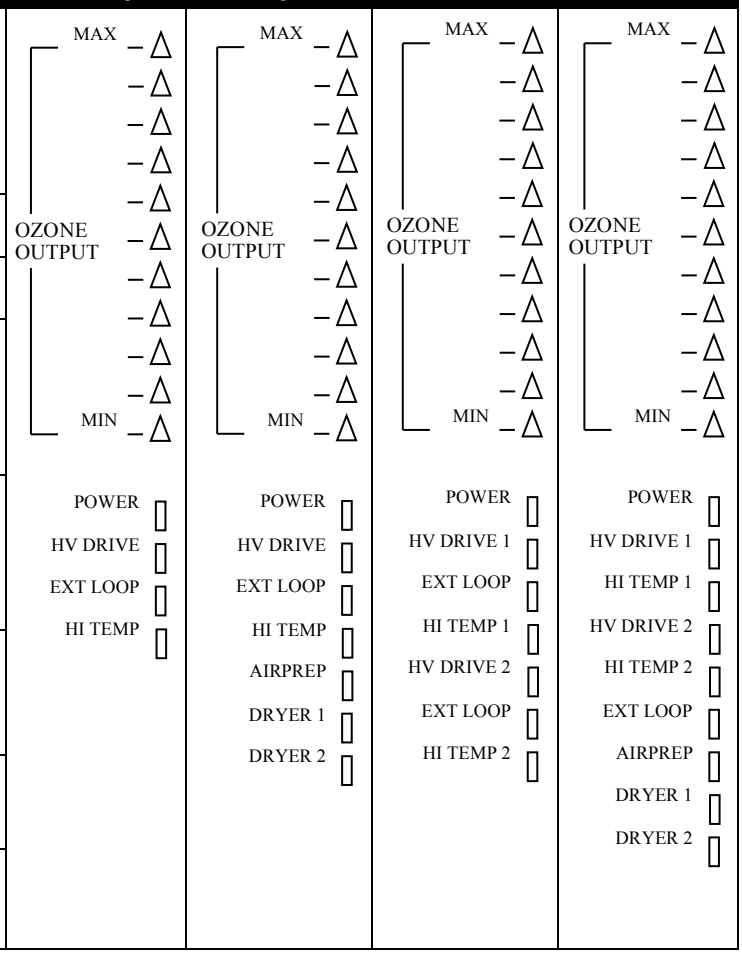

Ozone Output Control Function Chart

Ozone Output Control – ClearWater Tech ozone generators are equipped with two options for controlling the ozone output. The first, a manual 0-100% ozone output control and the second option, a remote 4-20mA control signal. The top function chart relates to CWT wall-mount HO, CD10 Series and Pressurized ozone generators, November 2004 and newer. The bottom chart relates to all CWT wall-mount HO ozone generators November 2004 and older and all cabinet HO and Pressurized ozone generators. For further information regarding CWT equipment please contact our Service department.

FEATURE	EXTERNAL LOOP	MANUAL ADJUST	4-20mA	OZONE OUTPUT
MANUAL OZONE OUTPUT CONTROL	IF REMOVED (circuit open)	N/A	N/A	0%
	IF IN PLACE (circuit closed)	YES	N/A	0-100%
REMOTE 4-20mA CONTROL	IF REMOVED (circuit open)	N/A	N/A	0%
	IF IN PLACE (circuit closed)	N/A	4-20mA Control Signal	0-100%

Manual Ozone Output Control -Turning the control knob counterclockwise will decrease the ozone output to down 0%, while turning the knob clockwise will increase the ozone output up to 100%.

Remote 4-20mA Control: A 4-20mA control signal to the ozone generator may be used to control the ozone generator output. The ozone generator will automatically sense the 4-20mA input signal and override the setting of the manual ozone output control. Based on the 4-20mA signal, ozone output will increase or decrease, 4mA = 0% ozone output, 20mA = 100% ozone output. **Note: If the remote 4-20mA signal fails or is missing, the system will default to the manual ozone output setting. Check and adjust the manual ozone output control knob to avoid over-ozonation.**

FEATURE	CONTROL MODE	EXTERNAL LOOP	MANUAL ADJUST	4-20mA	OZONE OUTPUT
MANUAL OZONE CONTROL	"VARIABLE/ON" (Left Position)	IF REMOVED (circuit open)	N/A	N/A	0%
		IF IN PLACE (circuit closed)	YES	N/A	0-100%
OZONE BYPASS	"Bypass/Off" (Center Position)	N/A	N/A	N/A	0%
REMOTE 4-20mA CONTROL	"4-20 mA/Auto" (Right Position)	IF REMOVED (circuit open)	N/A	N/A	0%
		IF IN PLACE (circuit closed)	N/A	4-20mA Control Signal	0-100%

Variable/On - feature allows for manual control of the ozone output (0-100%) using the potentiometer with the external loop circuit closed. When the external loop circuit is open, the ozone output will be zero (0%) and cannot be manually controlled.

Ozone Bypass/Off – This feature provides (0%) ozone output, with other controls (EXTERNAL LOOP, POT or 4-20mA) having no effect on ozone output. This function is for set up of SCFH, testing troubleshooting of the equipment only, without ozone being generated.

4-20mA Control/Auto – This feature allows for control of the ozone output (0-100%) from an external source that supplies a 4-20mA signal (ORP, PPM controller, etc.). The external source provides a 4mA signal to give zero (0%) ozone output, and a 20mA signal to give full (100%) ozone output with the external loop circuit closed. Any percentage between 0% and 100% is achieved by varying the 4-20mA signal with the external loop circuit closed. Opening the external loop circuit will shut down the ozone output to zero (0%), regardless of the 4-20mA signal level.

Drive Module Input

Shown: Standard Drive Module

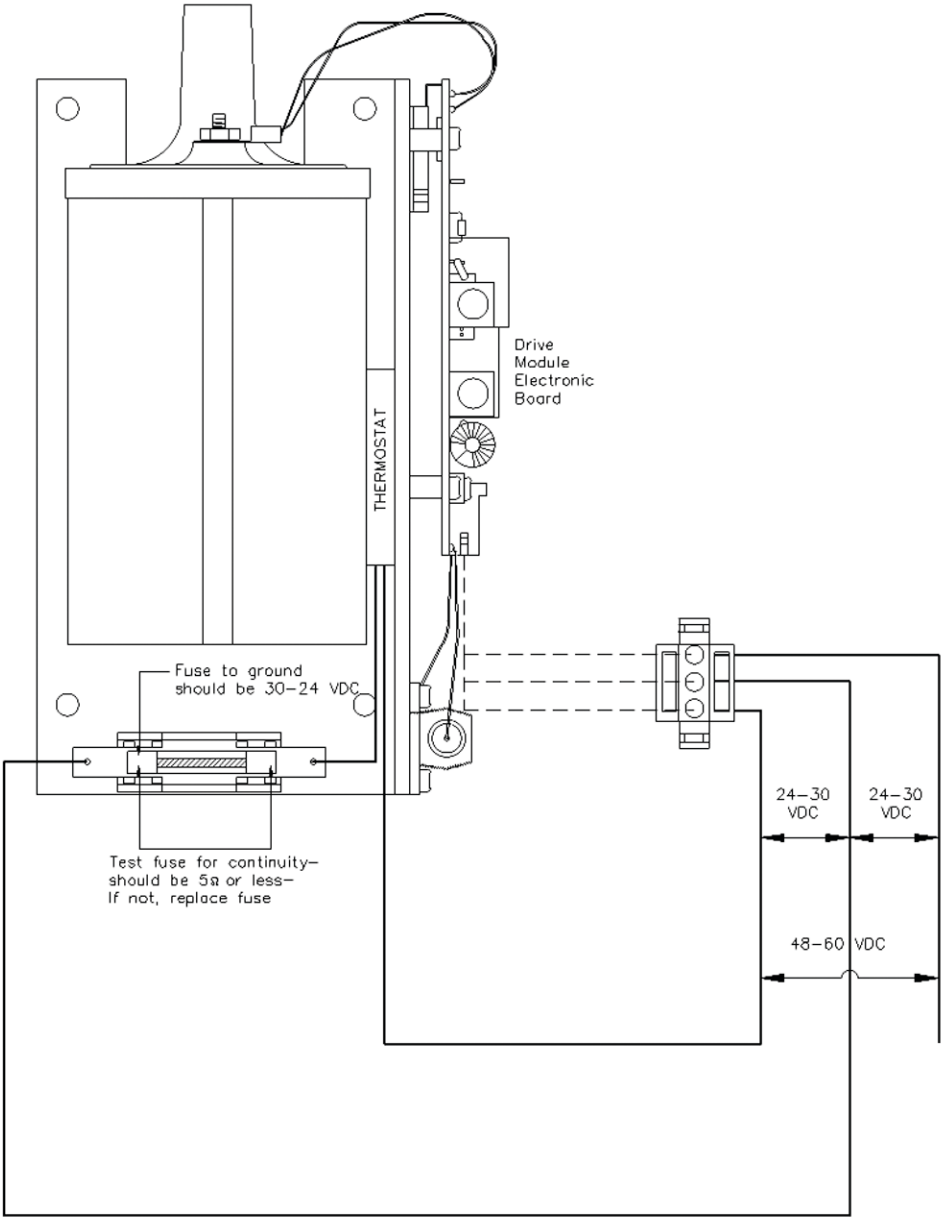

HO Drive Module Input Voltages

Shown: HO Drive Module

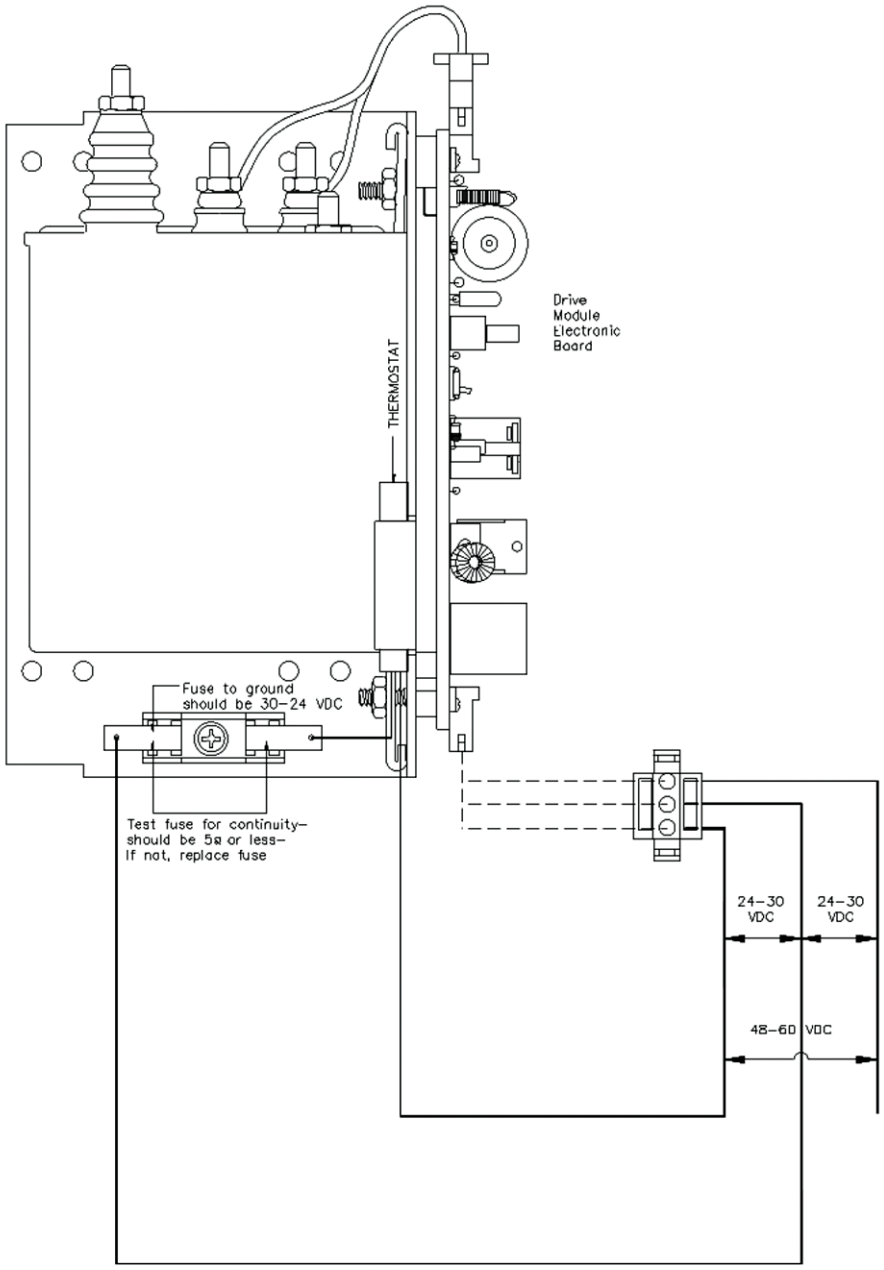

CWT High Output Drive Board Function

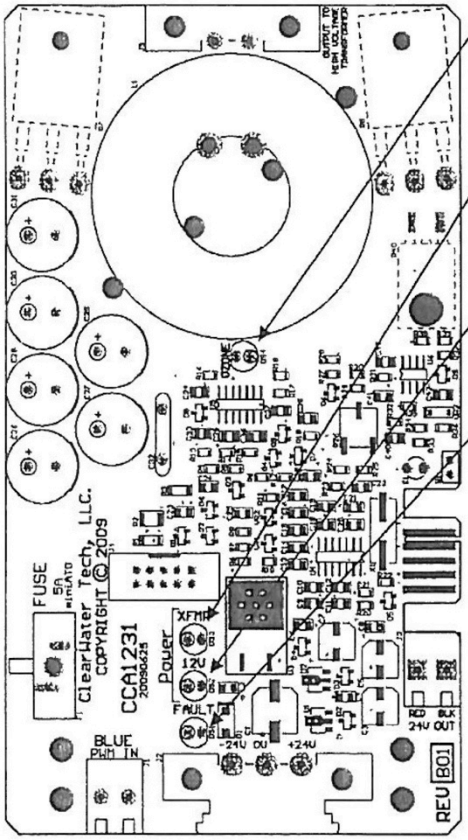

Ozone LED – An orange/yellow light indicating ozone production in the chamber. Light will blink as ozone production is turned up and down.

XFMR LED – A green light indicating that the positive 24V rail is correctly powering the drive board.

12V LED – A green light indicating that microprocessor on the board is operating correctly.

Fault LED – A red light indicating when the board has shut down due to a fault condition. The light will blink to indicate the reason for the fault.
1 blink every second – The drive board is pushing as much power into the chamber as it can, but the microprocessor is sensing less than 50% of the necessary power going into the chamber. This is indicative of a dead short on the high voltage lead.
2 blinks every second – The drive board's feedback had a series of sudden dips indicative of unusual arcing occurring somewhere in the system.
3 blinks every second – High temperature. The thermal switch on the board has closed indicating that it was exposed to temperatures exceeding 140F.

High Output Drive Board Selection

Over the last few years we've upgraded and enhanced the drive system (this is the drive board and high output transformer assembly) in some of our higher output ozone generators. When it comes time to replace a drive board or transformer, these version changes do make it more complicated to get the correct component, as **the drive board needs to be used with its intended transformer**.
If the pictured transformers do not match what is in your ozone generator, there's no need to read on as it this does not apply to your ozone generator.

When replacing a component of a drive system there are two options: Order the correct version component (if available), or upgrade to the current revision.

To find out what version components you require for your drive system, first compare the high output transformers pictured below to the transformer(s) in the ozone generator. Pictures of the associated version drive board are included.

Pictured to the right are the current transformer, the HVT275 and the current drive board CCA1231.

Replacement transformers are available; the part number is HVT275SA.
Replacement drive boards are available for this transformer; the part number is CCA1231SA.

HVT275

CCA1231

Pictured are the HVT250, sometimes listed as the HVT255, transformer and the associated drive board is the ELPC5215.

If you require a replacement transformer of this type, unfortunately, it is no longer available. You will need to install a drive upgrade kit, listed below (see Upgrading section).
Drive boards for this version transformer are available; the part number is ELPC5215SA.

HVT250

ELPC5215

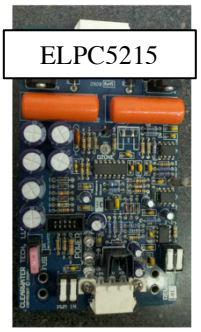

Pictured are the HVT200 transformer and the associated drive boards, ELPC5210 and ELPC5200.
If you require a replacement transformer of this type, unfortunately, it is also no longer available. You will need to install an upgrade kit, listed below (see Upgrading section).
If you require a replacement drive board for this transformer, a compatibility test will have to be performed. The ELPC5200 is no longer available.

HVT200

ELPC5210

ELPC5200

Note: The ELPC5215 and ELPC5210 are nearly identical. Look for the part number labeled on the board, or identify the transformer version to select the correct drive board.

High Output Drive Board Selection

HVT200 – ELPC5210 Compatibility Test
Follow these steps:

- Scrape away a small portion of the black paint on any side other than the top (the top has the five connection points). The underside of the transformer is recommended.
- If the material under the black paint is aluminum, the drive board compatible with this transformer is no longer available, install a drive upgrade kit, listed below (see Upgrading section).
- If the material is copper, you can order a replacement board.

The part number for a replacement drive board for the HVT200 (copper) is ELPC5210SA. Here is a sample photo of the underside of a HVT200 transformer that displays copper. Your transformer's color should be easily identifiable like this example.

Upgrading
Upgrading the drive system is only necessary if you require a replacement transformer. If you require a replacement drive board because of the usual heat, age, and environmental issues, these boards are still available. Consider upgrading to the current drive system if you are replacing an older drive board; the price is comparable.
Upgrade kits are sorted by model number of the ozone generator. The kits include the current transformer and drive board system, hardware specific to the generator, and installation instructions. For dual drive systems, you have the option of upgrading just one half of the drives, or the complete drive system.

Model CD2000 & CD2000P (These systems have two drive systems)
Upgrade kit for single drive: HVT204SA
Upgrade kit for both drives: DRM60SA

Model CD1500 & CD1500P (A15e)
Upgrade kit for drive system: HVT205SA
Important: If your power supply is of an older version, it will also need to be upgraded in order for the current drive system to operate properly.
Pictured is the current version power supply.

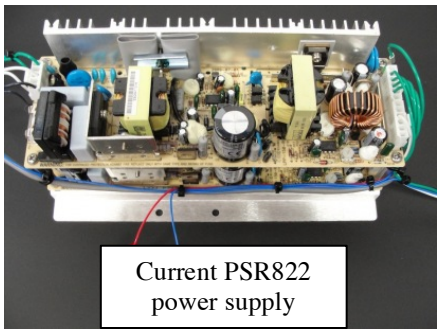

PSR822 Power Supply
If the installed power supply differs in type and/or location in the ozone generator, order the power supply upgrade kit.
Upgrade kit for power supply: PSR1500SA

Model CD15/AD
Upgrade kit for drive system: HVT206SA
All other generator models have the drive system mount directly to the reaction chamber. These models include: SC27P, Mobile Wash Carts, and the HO and P versions of cabinets (example: CD8000P and CD12000HO)
Upgrade kit for single drive system: HVT207SA
Note: When installing the upgrade kit, new holes will have to be drilled into the heat sink to mount all four corners. Installing only using two points is an option, assuming you are not shipping the system.

General Troubleshooting Guide

This guide goes over the standard troubleshooting that is performed during periodic check-ups on a system or if it is suspected of not performing properly. The installation of a gauge assembly on the system makes this much easier.

To have the expected amount of ozone oxidizing the water, four basic factors have to be taken into account. If one of these is not working properly it will result in a reduced amount of ozone oxidizing the water, and thus low ORP and ozone ppm readings.

- **The ozone generator** has to produce ozone
- **The air preparation system** has to be functional
  - An air dryer should dry the air
  - An oxygen concentrator should both dry the air and produce 90% oxygen
- **No air leaks** should be present in the airlines, this will insure the gas we're introducing into the water is in fact ozone.
- **The water** itself has to have the correct properties to allow the ozone to oxidize properly

The Ozone Generator

In all of our systems there is a display light of some kind that you typically see during ozone production. If it is illuminated, we can expect ozone is being generated; the cause for any reduction in ozone output will likely be found in the other three sections of this guide.

All of our corona discharge ozone generators are "all-or-nothing" type systems.
There are enough diagnostics built in to most systems that will disable the "ozone" light if there is an issue.
If the output light is not illuminated, the generator is not producing ozone and the ozone generator should be investigated. Consult the ozone generators manual and any support documents.

Verify ozone generation by detecting the scent of ozone anywhere in the installation (e.g. the tubing connection on the contact tank's off-gas vent). Due to the ozone generator being "all-or-nothing" if some ozone is detected, we know that the reaction chamber and related circuitry is operational.

If we cannot detect ozone in an easy fashion, we can test the ozone generator directly by blowing air through it:

- Disconnect tubing from the underside of the air inlet of the ozone generator; the intention is to blow air into this fitting.
  - A common location is the underside of the airflow (SCFH) gauge mounted on the underside of the ozone generator.
  - If no gauge is installed, it will be a brass connection on the underside of the ozone generator, in an ozone model number that ends in "/AD" it will be the left-side brass connection we are interested in.
- Disconnect the ozone outlet of the ozone generator.
  - This is a stainless steel fitting, commonly with a grey check valve installed in this port. Remove the check valve, as blowing air through it can be difficult.
- Apply power, enable ozone output and allow it to run for 30 seconds
- Cup your hand around the ozone outlet fitting and flow air into the brass inlet
- Detect the scent of ozone in your hand
  - The smell of ozone is sharp, sweet and can be smelled after a thunderstorm, it is often described as similar to chlorine bleach.
  - If ozone is detected, then the generator is working.
  - If there is no scent of ozone, note down all display lights, gauge readings. Write down the model and serial number of the unit, consult the manual or contact your distributor or ClearWater Tech to continue troubleshooting.

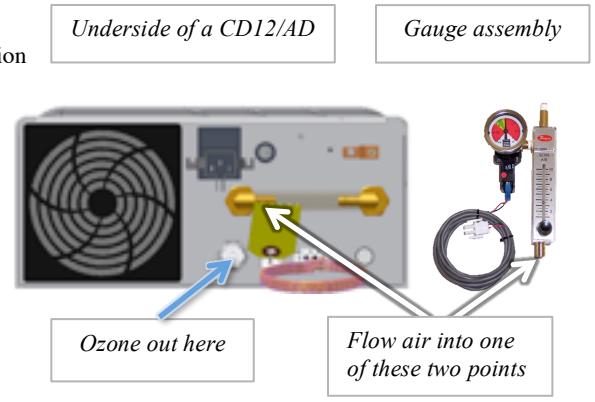

Air Preparation

Blue silica gel crystals are installed in each model ozone generator. Some models have a chamber visible through the cover that has mixed blue and white crystals. This is at times referred to as indicating desiccant media.

Ozone generators need to be supplied with dried air or oxygen to produce the expected amount of ozone. Ozone generators with model numbers that end in "/AD" have internal air dryers for this purpose. Other models are commonly paired with oxygen concentrators.

The color of the crystals serves as a status check on the air supplying the ozone generator. There should be no moisture present in the output of an air dryer or oxygen concentrator.
Any moisture passing through the crystals will be absorbed by the silica and produce a color change of blue, to pink and finally to white.

Inline particulate filters and indicating chamber within a unit The original blue and two colors that indicate a nonfunctioning air preparation system

General Troubleshooting Guide

A color change from blue to pink or white indicates a possible failure of the air dryer or oxygen concentrator and will severely reduce ozone output.

- Ozone generators with model numbers that end in "/AD": Perform the recommended annual maintenance. Replacement of the air dryer media and all indicating media is a part of this maintenance. More information would be available in the unit's manual.
- Systems with oxygen concentrators: Perform the recommended annual maintenance to the ozone generator in addition to inspecting and verifying the health of the associated oxygen concentrator. Information is available in the associated manual.

Air Leaks

Most installations of our ozone generators involve a venturi injector plumbed into a pressurized water line; this creates a suction that draws the ozone gas into the water.
If there are any breaks in the line, or any component, ambient air enters the line supplanting the ozone, diluting it or if the leak is far enough back, corrupting the dried air from the air prep. Any of these things will result in lowering the ozone output of a system.

Gauge assembly including vacuum switch

Injector manifold with disconnected check valve assembly

If a gauge assembly installed on the ozone generator, insure the needle is kept between -3 to -8"Hg. This is color-coded to a "green" area of the gauge.

- Adjust the black knob at the base of the airflow gauge to move the needle within the green range.
  - If the needle moves freely within the green range, there is no leak. The gas flowing through the ozone generator is getting into the water through the venturi injector.
  - If the needle cannot be brought into the green range, or adjustments to the black knob cause the needle to move to zero (it has to be closed most of the way to bring the needle barely into the green) there may be an air leak.

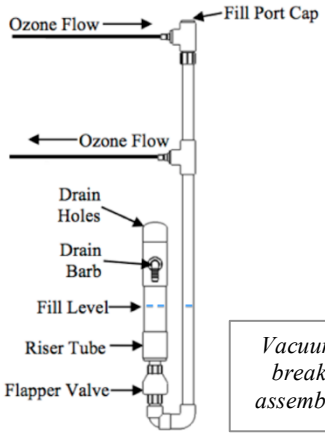

Vacuum break assembly

Finding an air leak, or no gauge assembly installed, confirm the level of vacuum at the injector is maintained throughout the ozone system.

- Deny power to the ozone generator.
- Disconnect the tubing at the injector and place your thumb over the injector fitting. Use the tactile suction present to give you a baseline level of suction.
- Compare this level of suction to each point of tubing connections after reconnecting the injector.
- Proceed to the end of each tubing connection starting from the injector back to the air preparation system.
  - Specifically check before and after vacuum break, if installed. This is a water trap to keep the ozone generator from getting wet if the check valves fail. In order to remain sealed, there needs to be water on top of the white PVC flapper valve.
  - If vacuum is felt before the ozone generator, but is not detected after it; our leak is obviously within the ozone generator. Insure the power cord is disconnected and remove the cover of the unit. Continue to check within the ozone generator, before and after the reaction chambers is an ideal test.

By now, you've verified there are no leaks or have found an area that is leaking. Consult with your distributor or ClearWater Tech to find out what is involved in resolving the leak (usually maintenance).

Water Chemistry

This area is typically explored when we suspect low ozone output, and the first three sections show to have no issues.

Abnormal pH
7.2 pH is optimal for ozone, the farther you are away from 7.2 you will experience lower ozone oxidation and ppm retention time.

Higher temperature
The hotter the air or water is, the faster ozone will convert back to oxygen. Anything over 85 degrees F will be considered 'hot' by these systems. As temperatures will normally go over this level depending on season or heated pools, all ozone systems are typically oversized to take this into consideration.

Atmospheric breaks
While pressurized in a contact tank or in the pipe, ozone will oxidize the water and build up a small residual ppm level before converting back to oxygen.
If the pressure is suddenly lost due to being introduced to an open (atmospheric) tank or a water feature such as a waterfall, we can expect the ozone to jump out of solution of the water. Oxidation and ppm retention will continue, but at a reduced level in and after this point.

Miniseries Inspection Sheet

FOR USE WITH CD10, CD10/AD, CD12 & CD12/AD

Ozone generator model: _____
Ozone serial number: _____

Oxygen concentrator: _____
Oxygen serial number: _____
(If installed)

Date of inspection: _____
Date of installation: _____

Inspector name: _____
Contact #/email: _____

Shown: CD10/AD

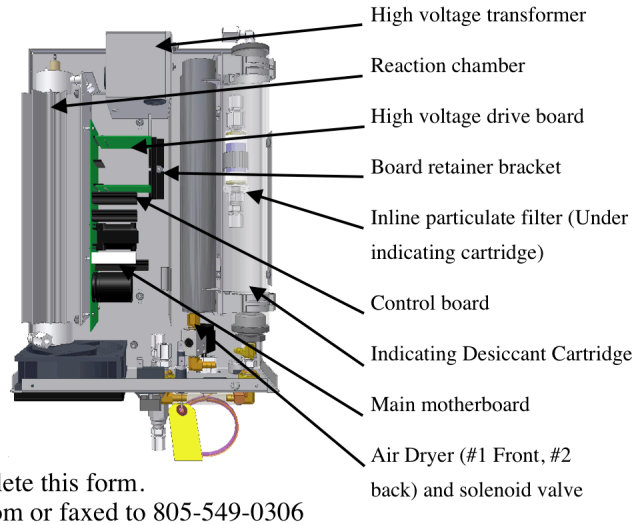

When performing an inspection or troubleshooting a system please complete this form.
For troubleshooting assistance, it can be emailed to service@cwtozone.com or faxed to 805-549-0306

1. Display Lights

Mark the illuminated (if any) display lights on the chart Below
Notes: The "AIRPREP" light will always blink on and off. There is a 30 minute period where Dryer #1 & Dryer #2 are off, this is normal. The dryers are in a cool down phase before switching.

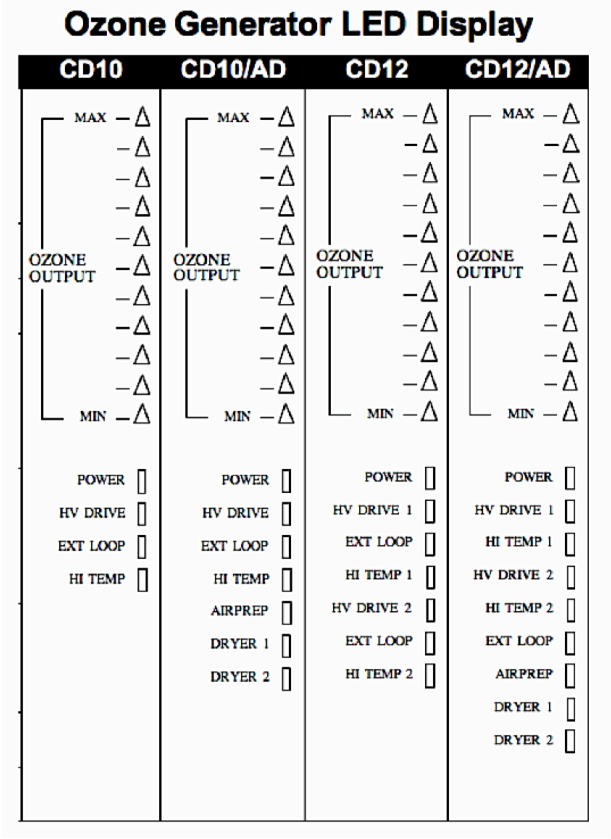

2. Gauge Readings

If a gauge assembly is installed, mark or list the readings observed during normal operation.

VAC/PSI: _____ (Expected: -3 to -8"Hg)
SCFH: _____ (Expected: 4 SCFH for CD10 and CD10/AD, 8 SCFH for CD12 and CD12/AD)

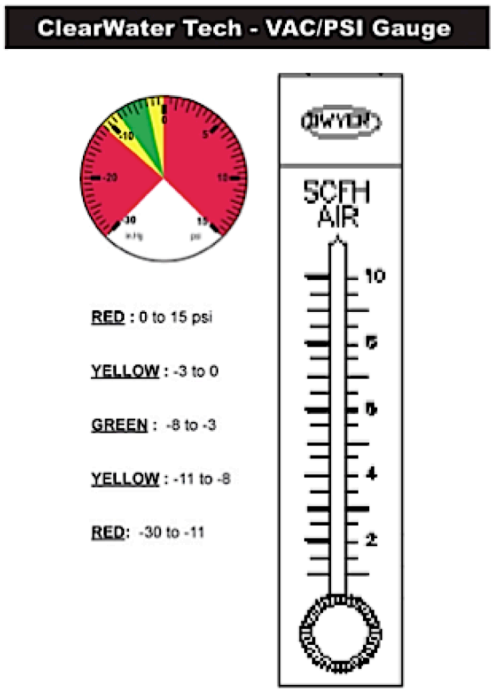

Miniseries Inspection Sheet

FOR USE WITH CD10, CD10/AD, CD12 & CD12/AD

3. Colored Crystals

Look for the inline particulate filter within the ozone generator; it is pictured to the right.
In CD10/AD units, look for the desiccant chamber visible through the cover.
The color of the media serves as a status check of the air dryer or oxygen concentrator.
The normal color for the inline particular filter is blue, for the chamber visible through the cover; it is mixed blue and white crystals.

Inline Particulate Filter

Any moisture passing through this media will be absorbed by the media and produce a color change from blue, to pink and finally to white. This serves as a status check of the air dryers or oxygen concentrators.

Color of media: _____ (Blue / Pink / White / Other)

Air Dryer Solenoid Valve

4. Solenoid Valve Status

Valid only for the CD10/AD and CD12/AD
Confirm the integrity of the air dryer solenoid valve. If compromised, it will require replacement. Alternatively, the air dryer assembly as an entirety can be replaced.

Solenoid Status: _____ (Good / Bad)

5. Vacuum Break Status

If a vacuum break is installed, confirm there is water present within the riser tube and there are no bubbles in this water.
If there are bubbles, confirm their direction of flow: up or down the riser tube.

Water present: _____ (Yes / No)
Air bubbles: _____ (Yes / No)
Bubble direction: _____ (Up / Down / NA)

Vacuum Break Detail

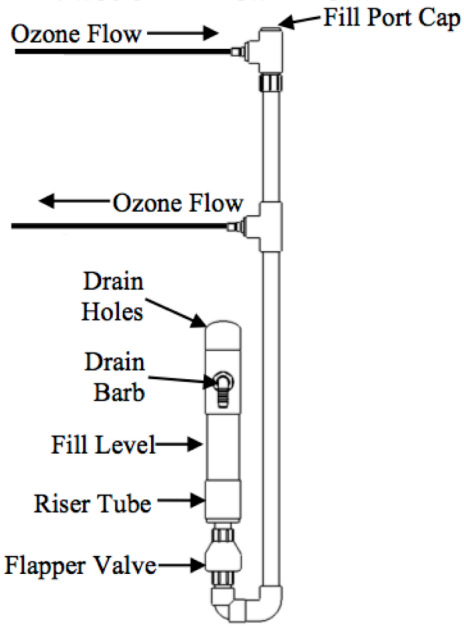

6. Off Gas Vent Status

If a contact tank is installed downstream of the venturi injector, there will be an off gas vent present on top of the tank.

Under normal operation, water should be present within the clear bowl with air bubbling up regularly and flowing out of the outlet.

If the ozone generator is suspected of not generating ozone, check the vent's outlet for the smell of ozone (direct airflow over your hand, do not inhale directly).

Water level: _____ (None / At water level / Full)
Air venting: _____ (Yes / No)
Ozone scent: _____ (Yes / No)

Off Gas Vent

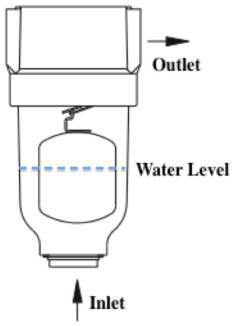

Pressurized Inspection Sheet

FOR USE WITH CD15NX & CD30NX

Ozone generator model: _____
Ozone serial number: _____

Oxygen concentrator: _____
Oxygen serial number: _____

Date of inspection: _____
Date of installation: _____

Inspector name: _____
Contact #/email: _____

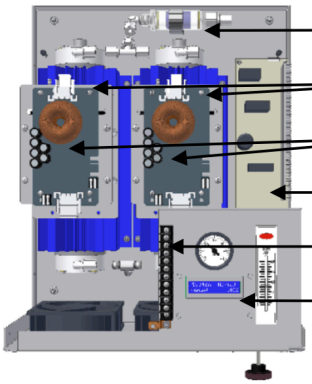

Shown: CD30nx

When performing an inspection or troubleshooting a system please complete this form.
For troubleshooting assistance, it can be emailed to service@cwtozone.com or faxed to 805-549-0306.

1. System Information Display

If the system is operating normally, the display screen will cycle through the model number and other information and will display "System Normal"
If there is an issue with the system it will display "System Problem" and will list useful information regarding it such as "Output 1" or an error code such as A3B0C0. Note the message on the display screen.

System: _____ (Normal / Problem)
Error Message / Code: _____
_____

2. Display Lights

If an error is observed and noted in the display screen, remove the cover and confirm the status of the lights on the drive board(s) and power supply boards within the ozone generator.

If no lights are visible on any board, confirm the cooling fans are spinning. If there is no fan movement, re-check the on/off switch and fuse.

CCA1231 Drive Board LEDs

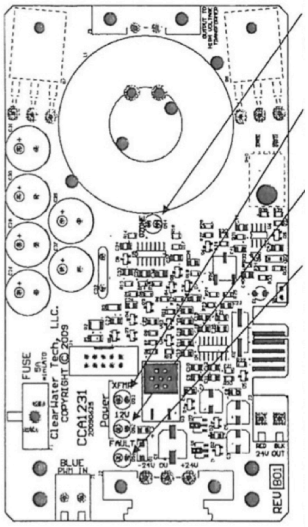

Drive board LED status:
Ozone LED -*Amber*: _____ (On / Off)
Power -XMFR -*Green*: _____ (On / Off)
Power - 12V -*Green*: _____ (On / Off)
Fault LED -*Red*: _____ (On / Off /Flashing -1, 2, or 3 beat pattern)

If the Ozone LED is not illuminated, but both green power lights are illuminated, perform the following test. Disconnect power from the ozone generator, disconnect the ribbon cable from the drive board(s), then power the system and attempt ozone generation; does the Ozone LED illuminate now?

Ozone LED with ribbon cable disconnected: _____ (On / Off)

Power supply LED status:
The power supply boards have a green LED in a corner of the boards indicating they are powered properly; consult the status of this LED on both power supply boards.

Power LED -*Green*: _____ (Both on / One on / Both off) Green

Pressurized Inspection Sheet

FOR USE WITH CD15NX & CD30NX

3. Gauge Readings

PSI: _____ (Expected: 9-11 PSI)
CFH: _____ (Expected: 3-4 CFH for CD15nx, 6-8 CFH for CD30nx)

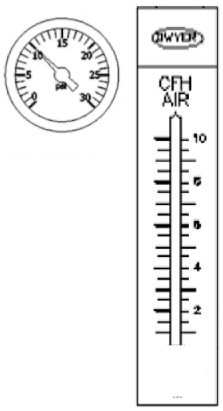

4. Vacuum Break Status

If a vacuum break is installed, confirm there is water present within the riser tube and there are no bubbles in this water. If there are bubbles, confirm their direction of flow: up or down the riser tube.

Water present: _____ (Yes / No)
Air bubbles: _____ (Yes / No)
Bubble direction: _____ (Up / Down / NA)

Vacuum Break Detail

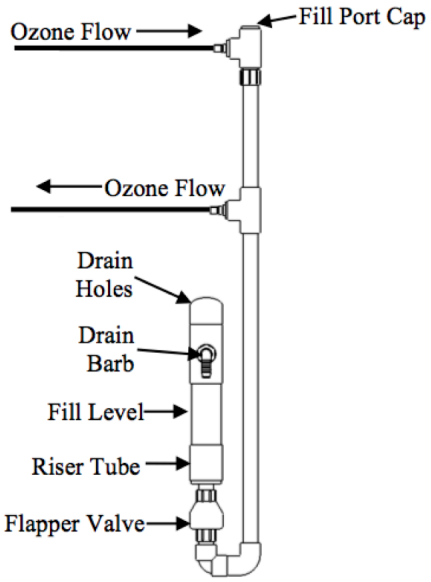

5. Colored Crystals

Look for the inline particulate filter within the ozone generator The color of the media serves as a status check of the air dryer or oxygen concentrator.
The normal color for the inline particular filter is blue.

Any moisture passing through this media will be absorbed by the media and produce a color change from blue, to pink and finally to white. This serves as a status check of the air dryers or oxygen concentrators.

Color of media: _____ (Blue / Pink / White / Other)

Inline Particulate Filter

6. Off Gas Vent Status

If a contact tank is installed downstream of the venturi injector there will be an off gas vent present on top of the tank.

Under normal operation, water should be present within the clear bowl with air bubbling up regularly and flowing out of the outlet.

If the ozone generator is suspected of not generating ozone, check the vent's outlet for the smell of ozone (direct airflow over your hand, do not inhale directly).

Water level: _____ (None / At water level / Full)
Air venting: _____ (Yes / No)
Ozone scent: _____ (Yes / No)

Off Gas Vent

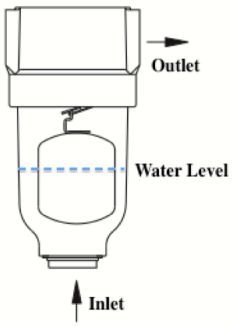

Pressurized Inspection Sheet

FOR USE WITH CD1500P & CD2000P

Ozone generator model: _____
Ozone serial number: _____

Oxygen concentrator: _____
Oxygen serial number: _____

Date of inspection: _____
Date of installation: _____

Inspector name: _____
Contact #/email: _____

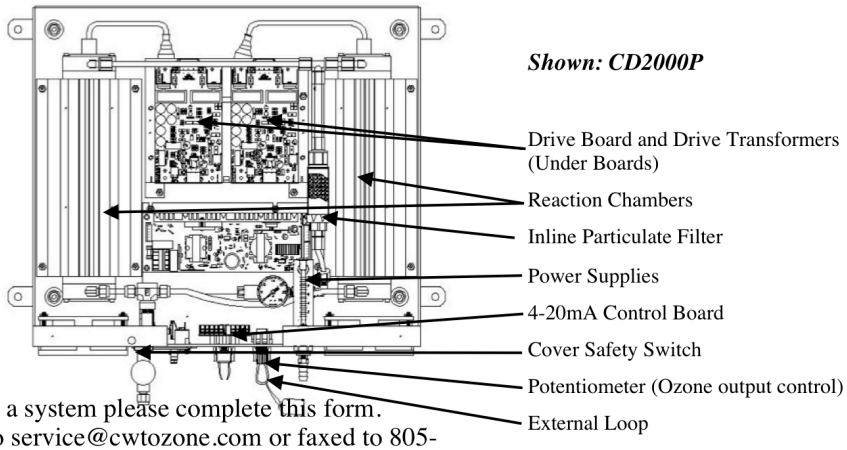

When performing an inspection or troubleshooting a system please complete this form. For troubleshooting assistance, it can be emailed to service@cwtozone.com or faxed to 805-549-0306.

1. Drive System Version

Consult the High Output Drive Component Selection supplement at the end of this form to note the version drive board, transformer and power supply installed in your system.
Note: If the power supply of your system does not match that pictured in the supplement, note your power supply version as "old"

Drive board version: _____ (CCA1231 / ELPC5215 / ELPC5210)
Transformer version: _____ (HVT275 / HVT250 / HVT200)
Power supply version: _____ (Current / Old)

Shown: CCA1231 Drive Board LEDs

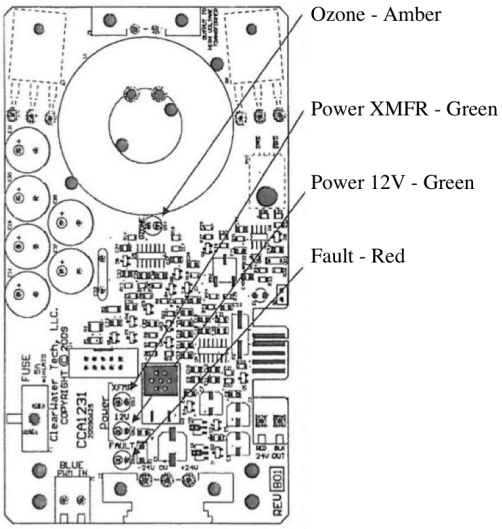

2. Display Lights

Observe the status of the lights on the drive board, control board, and power supply boards within the ozone generator.
To access the lights: Remove the cover, manually depress the door safety switch and power the unit for ozone operation.

If no lights are visible on any board, confirm the cooling fans are spinning. If there is no fan movement, re-check the cover safety switch, on/off switch and fuses.

Drive board LED status:
Note: The status of the lights will vary depending on board version. On the ELPC5200 version, there are only two lights, Power (green) and Ozone (red), adjust the responses accordingly.

Ozone LED -*Amber*: _____ (On / Off)
Power -XMFR -*Green*: _____ (On / Off)
Power - 12V -*Green*: _____ (On / Off)
Fault LED -*Red*: _____ (On / Off /Flashing -1, 2, or 3 beat pattern)

If the Ozone LED is illuminated, rotate the potentiometer knob located on the underside of the ozone generator to vary the ozone output; does the Ozone LED adjust accordingly?

Control of Ozone LED: _____ (Yes / No)

Pressurized Inspection Sheet

FOR USE WITH CD1500P & CD2000P

If the Ozone LED is not illuminated, but both green power lights are illuminated, perform the following test. Disconnect power from the ozone generator, disconnect the blue PWM wire from the drive board(s), then power the system and attempt ozone generation; does the Ozone LED illuminate now?

Ozone LED with Blue wire disconnected: _____ (On / Off)

Power supply LED status:
The current version power supply boards have a green LED in a corner of the boards indicating they are powered properly, consult the status of this LED on both power supply boards.

Power LED -*Green*: _____ (Both on / One on / Both off) Green

Control Board LED status:
The (4-20mA) control board located at the bottom of the unit, and is indicated on the above illustration. A red LED will illuminate on this board when the external loop circuit is opened, this will disable ozone output. Consult the manual for more information on the external loop circuit.

Control LED -*Red*: _____ (On / Off)

3. Gauge Readings

If a gauge assembly is installed, mark or list the readings observed during normal operation.
PSI: _____ (Expected: 9-11 PSI)
CFH: _____ (Expected: 3-4 CFH for CD1500P, 6-8 CFH for CD2000P)

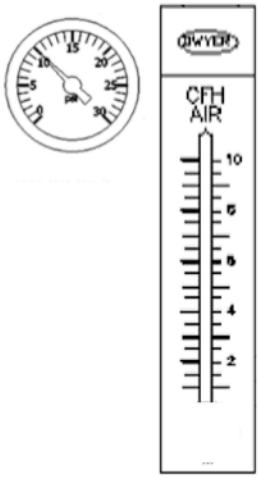

4. Colored Crystals

Look for the inline particulate filter within the ozone generator The color of the media serves as a status check of the air dryer or oxygen concentrator.
The normal color for the inline particular filter is blue.

Any moisture passing through this media will be absorbed by the media and produce a color change from blue, to pink and finally to white. This serves as a status check of the air dryers or oxygen concentrators.

Color of media: _____ (Blue / Pink / White / Other)

Inline Particulate Filter

Pressurized Inspection Sheet

FOR USE WITH CD1500P & CD2000P

5. Vacuum Break Status

If a vacuum break is installed, confirm there is water present within the riser tube and there are no bubbles in this water. If there are bubbles, confirm their direction of flow: up or down the riser tube.

Water present: _____ (Yes / No)
Air bubbles: _____ (Yes / No)
Bubble direction: _____ (Up / Down / NA)

Vacuum Break Detail

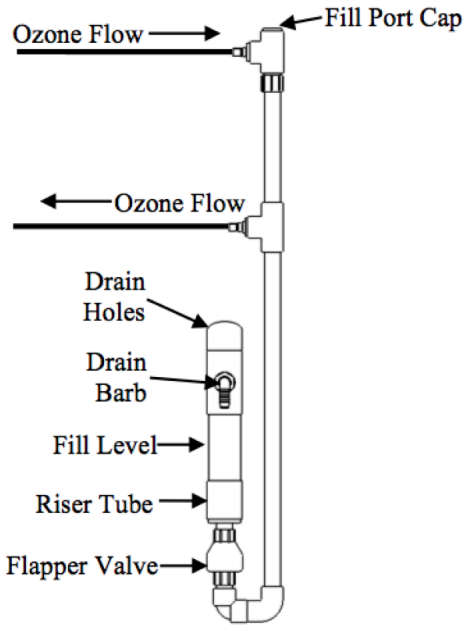

6. Off Gas Vent Status

If a contact tank is installed downstream of the venturi injector there will be an off gas vent present on top of the tank.

Under normal operation, water should be present within the clear bowl with air bubbling up regularly and flowing out of the outlet.

If the ozone generator is suspected of not generating ozone, check the vent's outlet for the smell of ozone (direct airflow over your hand, do not inhale directly).

Water level: _____ (None / At water level / Full)
Air venting: _____ (Yes / No)
Ozone scent: _____ (Yes / No)

Off Gas Vent

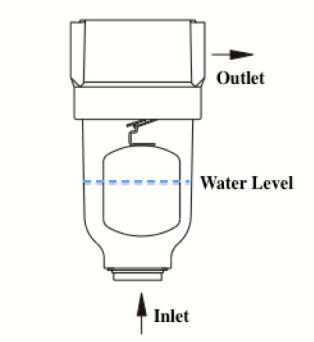

High Output Inspection Sheet

FOR USE WITH CD1500, CD15/AD & CD2000

Ozone generator model: _____
Ozone serial number: _____

Oxygen concentrator: _____
Oxygen serial number: _____

Date of inspection: _____
Date of installation: _____

Inspector name: _____
Contact #/email: _____

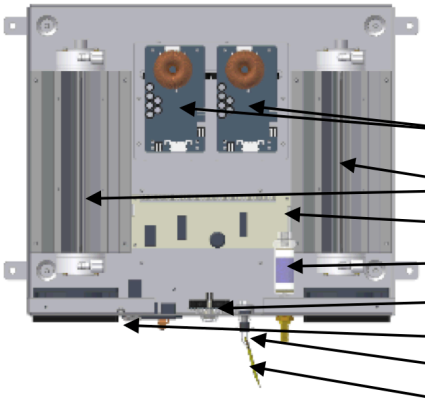

Shown: CD2000

When performing an inspection or troubleshooting a system please complete this form.
For troubleshooting assistance, it can be emailed to service@cwtozone.com or faxed to 805-549-0306.

1. Drive System Version

Consult the High Output Drive Component Selection supplement at the end of this form to note the version drive board, transformer and power supply installed in your system.
Note: If the power supply of your system does not match that pictured in the supplement, note your power supply version as "old"

Drive board version: _____ (CCA1231 / ELPC5215 / ELPC5210 / ELPC5200)
Transformer version: _____ (HVT275 / HVT250 / HVT200)
Power supply version: _____ (Current / Old)

Shown: CCA1231 Drive Board LEDs

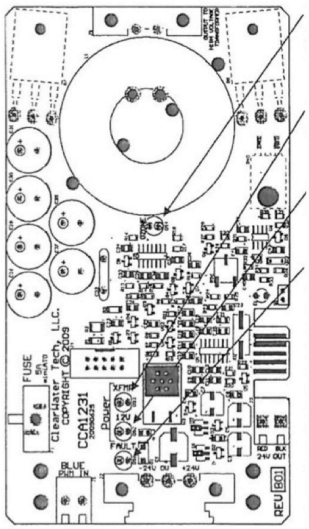

2. Display Lights

Observe the status of the lights on the drive board, control board, and power supply boards within the ozone generator.
To access the lights: Remove the cover, manually depress the door safety switch and power the unit for ozone operation.

If no lights are visible on any board, confirm the cooling fans are spinning. If there is no fan movement, re-check the cover safety switch, on/off switch and fuses.

Drive board LED status:
Note: The status of the lights will vary depending on board version. On the ELPC5200 version, there are only two lights, Power (green) and Ozone (red), adjust the responses accordingly.

Ozone LED -*Amber*: _____ (On / Off)
Power -XMFR -*Green*: _____ (On / Off)
Power - 12V -*Green*: _____ (On / Off)
Fault LED -*Red*: _____ (On / Off /Flashing -1, 2, or 3 beat pattern)

If the Ozone LED is illuminated, rotate the potentiometer knob located on the underside of the ozone generator to vary the ozone output; does the Ozone LED adjust accordingly?

Control of Ozone LED: _____ (Yes / No)

High Output Inspection Sheet

FOR USE WITH CD1500, CD15/AD & CD2000

If the Ozone LED is not illuminated, but both green power lights are illuminated, perform the following test. Disconnect power from the ozone generator, disconnect the blue PWM wire from the drive board(s), then power the system and attempt ozone generation; does the Ozone LED illuminate now?

Ozone LED with Blue wire disconnected: _____ (On / Off)

Power supply LED status:
The current version power supply boards have a green LED in a corner of the boards indicating they are powered properly, consult the status of this LED on both power supply boards.

Power LED -*Green*: _____ (Both on / One on / Both off) Green

Control Board LED status:
The (4-20mA) control board located at the bottom of the unit, and is indicated on the above illustration. A red LED will illuminate on this board when the external loop circuit is opened, this will disable ozone output. Consult the manual for more information on the external loop circuit.

Control LED -*Red*: _____ (On / Off)

3. Gauge Readings

If a gauge assembly is installed, mark or list the readings observed during normal operation.
VAC/PSI: _____ (Expected: -3 to -8"Hg)
SCFH: _____ (Expected: 7 SCFH for CD1500 and CD15/AD, 14 SCFH for CD2000)

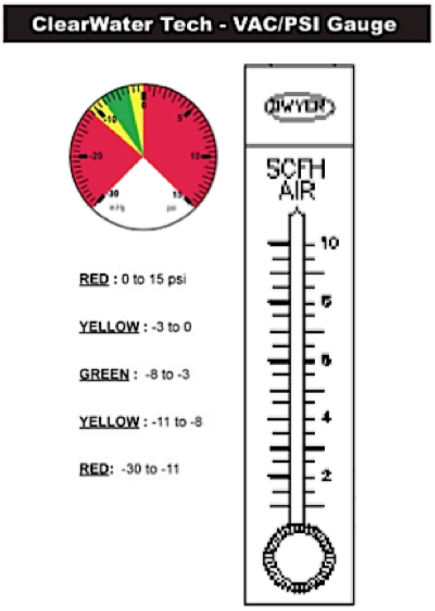

4. Colored Crystals

Look for the inline particulate filter within the ozone generator In CDS15/AD units, look for the desiccant chamber visible through the cover.
The color of the media serves as a status check of the air dryer or oxygen concentrator.
The normal color for the inline particular filter is blue. For the chamber visible through the cover; it is a mix of blue and white crystals.

Any moisture passing through this media will be absorbed by the media and produce a color change from blue, to pink and finally to white. This serves as a status check of the air dryers or oxygen concentrators.

Color of media: _____ (Blue / Pink / White / Other)

Inline Particulate Filter

High Output Inspection Sheet

FOR USE WITH CD1500, CD15/AD & CD2000

5. Solenoid Valve Status

Valid only for the CD15/AD model only

Confirm the integrity of the air dryer solenoid valve. If compromised, it will require replacement. Alternatively, the air dryer assembly as an entirety can be replaced.

Solenoid Status: _____ (Good / Bad)

Air Dryer Solenoid Valve

6. Vacuum Break Status

If a vacuum break is installed, confirm there is water present within the riser tube and there are no bubbles in this water. If there are bubbles, confirm their direction of flow: up or down the riser tube.

Water present: _____ (Yes / No)
Air bubbles: _____ (Yes / No)
Bubble direction: _____ (Up / Down / NA)

Vacuum Break Detail

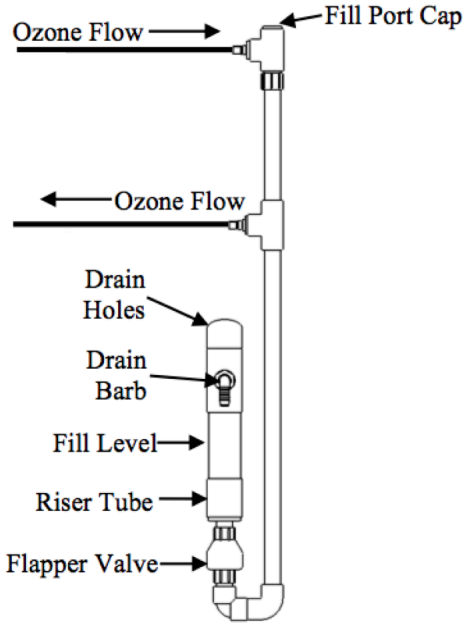

7. Off Gas Vent Status

If a contact tank is installed downstream of the venturi injector there will be an off gas vent present on top of the tank.

Under normal operation, water should be present within the clear bowl with air bubbling up regularly and flowing out of the outlet.

If the ozone generator is suspected of not generating ozone, check the vent's outlet for the smell of ozone (direct airflow over your hand, do not inhale directly).

Water level: _____ (None / At water level / Full)
Air venting: _____ (Yes / No)
Ozone scent: _____ (Yes / No)

Off Gas Vent

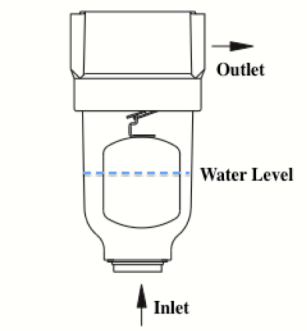

Standard Output Inspection Sheet

FOR USE WITH M1500, M15/AD & P2000

Shown: M15/AD

Ozone generator model: _____
Ozone serial number: _____

Oxygen concentrator: _____
Oxygen serial number: _____
(If installed)

Date of inspection: _____
Date of installation: _____

Inspector name: _____
Contact #/email: _____

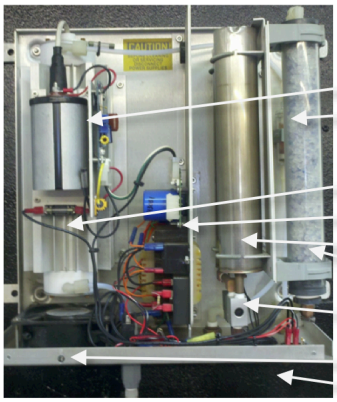

When performing an inspection or troubleshooting a system please complete this form. For troubleshooting assistance, it can be emailed to service@cwtozone.com or faxed to 805-549-0306

1. Display Light & Coil Status

The drive board has a single red LED. During normal operation, note if the LED is illuminated; this indicates ozone output.

Ozone LED -*Red*: _____ (On / Off)

Also, note the status of the drive coil. Examine the underside of the coil to see if it has overheated and the bottom edge has expanded downwards.

Drive coil status: _____ (Normal / Expanded)

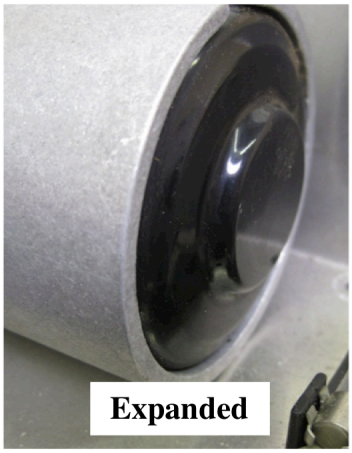

2. Gauge Readings

If a gauge assembly is installed, mark or list the readings observed during normal operation.

VAC/PSI: _____ (Expected: -3 to -8"Hg)
SCFH: _____ (Expected: 7 SCFH for M1500 and M15/AD, 14 SCFH for P2000)

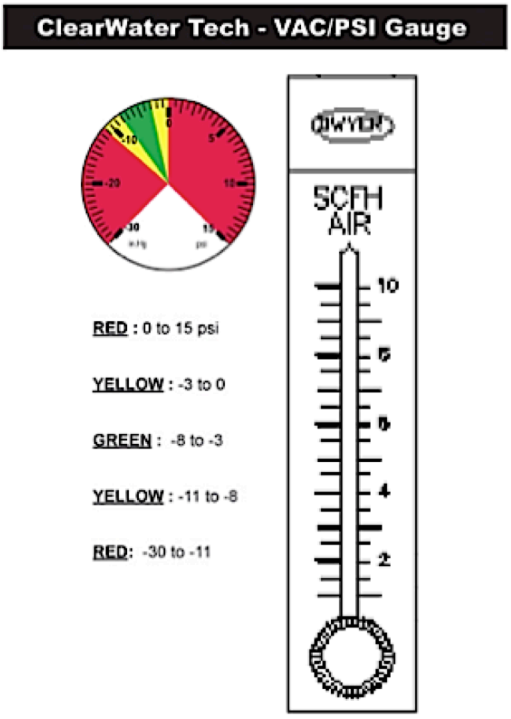

Standard Output Inspection Sheet

FOR USE WITH M1500, M15/AD & P2000

3. Colored Crystals

Look for the inline particulate filter within the ozone generator.
In M15/AD units, look for the desiccant chamber visible through the cover.
The color of the media serves as a status check of the air dryer or oxygen concentrator.
The normal color for the inline particular filter is blue. For the chamber visible through the cover, it is mixed blue and white crystals.

Inline Particulate Filter

Any moisture passing through this media will be absorbed by the media and produce a color change from blue, to pink and finally to white. This serves as a status check of the air dryers or oxygen concentrators.

Color of media: _____ (Blue / Pink / White / Other)

Air Dryer Solenoid Valve

4. Solenoid Valve Status

Valid only for the CD10/AD and CD12/AD
Confirm the integrity of the air dryer solenoid valve. If compromised, it will require replacement. Alternatively, the air dryer assembly as an entirety can be replaced.

Solenoid Status: _____ (Good / Bad)

5. Vacuum Break Status

If a vacuum break is installed, confirm there is water present within the riser tube and there are no bubbles in this water.
If there are bubbles, confirm their direction of flow: up or down the riser tube.

Water present: _____ (Yes / No)
Air bubbles: _____ (Yes / No)
Bubble direction: _____ (Up / Down / NA)

Vacuum Break Detail

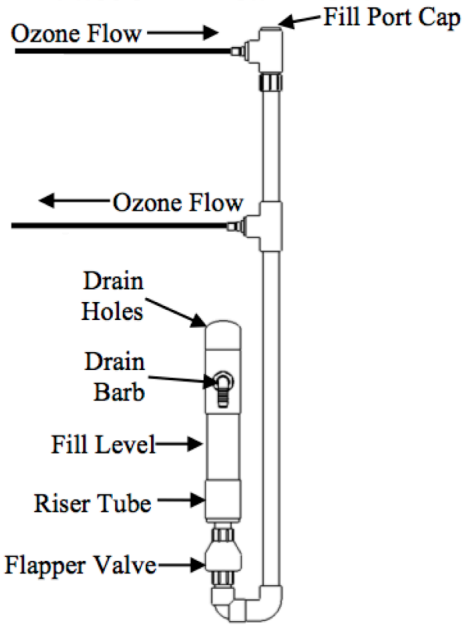

6. Off Gas Vent Status

If a contact tank is installed downstream of the venturi injector, there will be an off gas vent present on top of the tank.

Under normal operation, water should be present within the clear bowl with air bubbling up regularly and flowing out of the outlet.

If the ozone generator is suspected of not generating ozone, check the vent's outlet for the smell of ozone (direct airflow over your hand, do not inhale directly).

Water level: _____ (None / At water level / Full)
Air venting: _____ (Yes / No)
Ozone scent: _____ (Yes / No)

Off Gas Vent

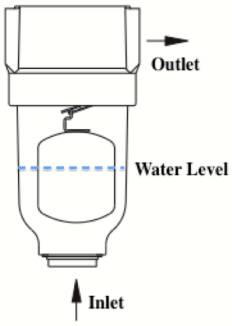

EcoTex Inspection Sheet
FOR USE WITH ECO1 & ECO2

Ozone generator model: _____
Ozone serial number: _____

Facility Name: _____
Date of inspection: _____
Date of installation: _____

Washer #1 Brand: _____
Washer #1 Model: _____
Washer #1 Capacity: _____(lbs.)

(ECO2 Only)
Washer #2 Brand: _____
Washer #2 Model: _____
Washer #2 Capacity: _____(lbs.)

Inspector name: _____
Contact #/email: _____

Shown: ECO2 Control Panel

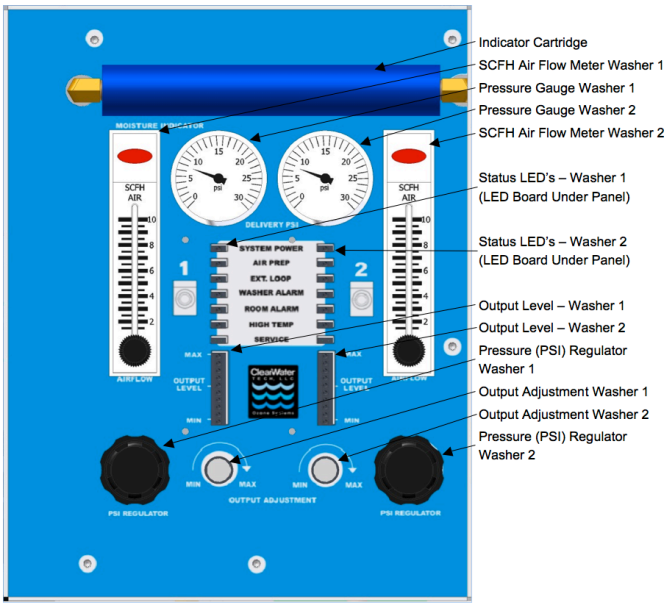

When performing an inspection or troubleshooting a system please complete this form.

It is recommended to complete this form on the date of installation to use as a reference.

For troubleshooting assistance, it can be emailed to service@cwtozone.com or faxed to 805-549-0306

1. Control Panel Display Lights

Mark the illuminated LEDs.

Note: During standby mode, only the System Power LED is illuminated.

During operation, the Air Prep and a number of number of Ozone Output LEDs illuminate.

LED	Function	Display	ECO2 Only
SYSTEM POWER	This LED should always be illuminated.	SYSTEM POWER	
AIR PREP	This LED will be illuminated when a washer signal is present. Airflow & Pressure gauges, & ozone output LEDs should be reporting normal operational levels. When this LED is not illuminated, the gauges should be showing "0" and no Output LEDs should be illuminated.	AIR PREP	
EXT LOOP	The External Loop or EXT LOOP has continuity through it when the LED is *not* illuminated, which indicates ozone is being produced, when the Output Level Control LED's are illuminated. The External Loop *does not* have continuity, when the LED is illuminated, which indicates no ozone production.	EXT LOOP	
WASHER ALARM	When this LED is illuminated a washer alarm signal is present at the "Washer 1" or "Washer 2" alarm terminal. When illuminated oxygen and ozone will not be produced, and the Oxygen Flow and the Output Level LED's will not be illuminated.	WASHER ALARM	
ROOM ALARM	When this LED is illuminated a Room Alarm signal is present to one of the Room Alarm terminals. When illuminated oxygen and ozone will not be produced, and the Oxygen Flow and the Output Level LED's will not be illuminated.	ROOM ALARM	
HIGH TEMP	The High Temp LED will not be illuminated during normal operation. If the ozone generator's internal temperature is in excess of 150°F the High Temp LED will illuminate, which will also discontinue ozone production.	HIGH TEMP	
SERVICE	The Service LED will become illuminated after the unit has been powered for approximately 2 years. Maintenance is highly recommended; please consult the "Annual Procedures" in the Maintenance section of the manual. To reset, press the Service Reset button on the control board (labeled SW1, it is above the Room Alarm terminals).	SERVICE	
OZONE OUTPUT	These LED's will be illuminated when a washer signal is present. The ten LED's represent 0-100%, minimum to maximum ozone output. Each LED is equal to 10% output. These LED's can be adjusted with the manual Output Adjustment control knob located on the main control panel of the ozone generator or automatically with a remote 4-20mA control signal. These LED's will not be illuminated if a Washer Alarm or Room Alarm signal is present.	MAX OUTPUT LEVEL MIN	

ClearWater Tech, LLC.
Toll Free: 800.262.0203 • Ph: 805.5449.9724 • Fax: 805.549.0306
850-E Capitolio Way, San Luis Obispo, CA 93401 • email: service@cwtozone.com • www.cwtozone.com 072213

EcoTex Inspection Sheet
FOR USE WITH ECO1 & ECO2

2. Gauge Readings

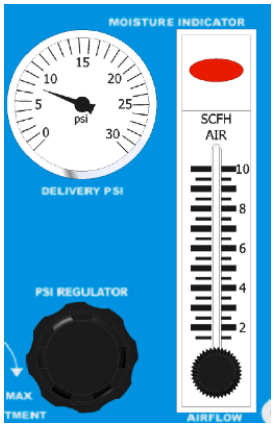

List the readings observed during normal operation.

Washer #1
PSI: _____ Range: 4 to 6 PSI
SCFH: _____ Range: 1 to 3 SCFH

Washer # 2 (ECO2 only)
PSI: _____ Range: 4 to 6 PSI
SCFH: _____ Range: 1 to 3 SCFH

3. Indicator Cartridge

The indicator cartridge is filled with silica gel. Upon installation, some of the silica are blue in color. If moisture passes through this cartridge, the blue silica will absorb the moisture and change color.

A color change from blue to pink or white indicates a possible issue with the oxygen concentrator. The oxygen concentrator may need service, consult the "Troubleshooting" section of the manual. The indicator cartridge may need replacement.

Color of media: _____ (Blue / Pink / White / Other)

4. EcoTex Air Sensor

The EcoTex Air Sensor has two display LEDs.
Note the current status of the LEDs.

Green LED: _____ (On, Off or Flashing)
Red LED: _____ (On, Off or Flashing)

Summary of LED Indicators

Green LED	Red LED	Description
Flashing	Off	The head is in a cleaning cycle
On Solid	Off	The unit is powered and functioning normally
On Solid	Flashing	Ambient ozone level above high-limit set-point – Relays Open
Flashing	Flashing	Sensor head failure – Relays Open

ClearWater Tech, LLC.
Toll Free: 800.262.0203 • Ph: 805.5449.9724 • Fax: 805.549.0306
850-E Capitolio Way, San Luis Obispo, CA 93401 • email: service@cwtozone.com • www.cwtozone.com 072213

EcoTex Inspection Sheet

FOR USE WITH ECO3 & ECO4

Ozone generator model: _____
Ozone serial number: _____

Facility Name: _____
Date of inspection: _____
Date of installation: _____

Washer #1 Brand: _____
Washer #1 Model: _____
Washer #1 Capacity: _____(lbs.)

(ECO4 Only)
Washer #2 Brand: _____
Washer #2 Model: _____
Washer #2 Capacity: _____(lbs.)

Inspector name: _____
Contact #/email: _____

Shown: ECO4 Control Panel

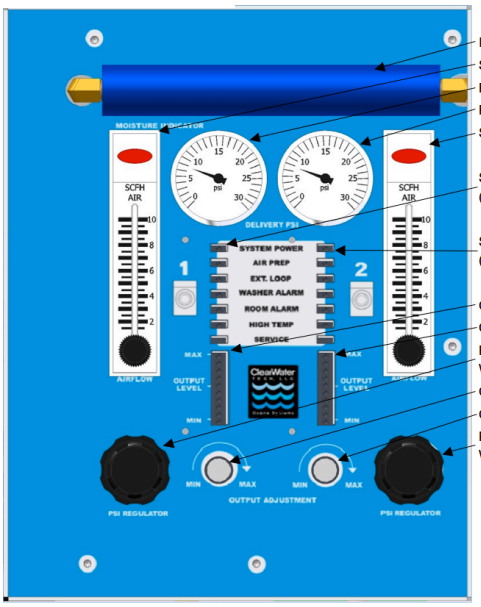

When performing an inspection or troubleshooting a system please complete this form.

It is recommended to complete this form on the date of installation to use as a reference.

For troubleshooting assistance, it can be emailed to service@cwtozone.com or faxed to 805-549-0306

1. Control Panel Display Lights

Mark the illuminated LEDs.

Note: During standby mode, only the System Power LED is illuminated.

During operation, the Air Prep and a number of Ozone Output LEDs illuminate.

If the High Temp LED is illuminated, see "System Fault / High Temp" section below.

LED	Function	Display	ECO4 Only
SYSTEM POWER	This LED should always be illuminated.	SYSTEM POWER	
AIR PREP	This LED will be illuminated when a washer signal is present. Airflow & Pressure gauges, & ozone output LEDs should be reporting normal operational levels. When this LED is not illuminated, the gauges should be showing "0" and no Output LEDs should be illuminated.	AIR PREP	
EXT LOOP	The External Loop or EXT LOOP has continuity through it when the LED is *not* illuminated, which indicates ozone is being produced, when the Output Level Control LED's are illuminated. The External Loop *does not* have continuity, when the LED is illuminated, which indicates no ozone production.	EXT LOOP	
WASHER ALARM	When this LED is illuminated a washer alarm signal is present at the "Washer 1" or "Washer 2" alarm terminal. When illuminated oxygen and ozone will not be produced, and the Oxygen Flow and the Output Level LED's will not be illuminated.	WASHER ALARM	
ROOM ALARM	When this LED is illuminated a Room Alarm signal is present to one of the Room Alarm terminals. When illuminated oxygen and ozone will not be produced, and the Oxygen Flow and the Output Level LED's will not be illuminated.	ROOM ALARM	
HIGH TEMP	When this LED is illuminated the unit's high voltage drive boards are in fault mode. See "System Fault / High Temp" section of this sheet.	HIGH TEMP	
SERVICE	The Service LED will become illuminated after the unit has been powered for approximately 2 years. Maintenance is highly recommended; please consult the "Annual Procedures" in the Maintenance section of the manual. To reset, press the Service Reset button on the control board (labeled SW1, it is above the Room Alarm terminals).	SERVICE	
OZONE OUTPUT	These LED's will be illuminated when a washer signal is present. The ten LED's represent 0-100%, minimum to maximum ozone output. Each LED is equal to 10% output. These LED's can be adjusted with the manual Output Adjustment control knob located on the main control panel of the ozone generator or automatically with a remote 4-20mA control signal. These LED's will not be illuminated if a Washer Alarm or Room Alarm signal is present.	MAX OUTPUT LEVEL MIN	

ClearWater Tech, LLC.
Toll Free: 800.262.0203 • Ph: 805.5449.9724 • Fax: 805.549.0306
850-E Capitolio Way, San Luis Obispo, CA 93401 • email: service@cwtozone.com • www.cwtozone.com 072213

EcoTex Inspection Sheet
FOR USE WITH ECO3 & ECO4

2. Gauge Readings

List the readings observed during normal operation.

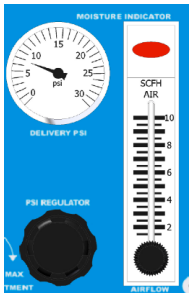

Washer #1
PSI: _____ Range: 8 to 10 PSI
SCFH: _____ Range: 3 to 5 CFH

Washer # 2 (ECO4 only)
PSI: _____ Range: 8 to 10 PSI
SCFH: _____ Range: 3 to 5 SCFH

3. Indicator Cartridge

The indicator cartridge is filled with silica gel. Upon installation, some of the silica are blue in color. If moisture passes through this cartridge, the blue silica will absorb the moisture and change color.

A color change from blue to pink or white indicates a possible issue with the oxygen concentrator. The oxygen concentrator may need service, consult the "Troubleshooting" section of the manual. The indicator cartridge may need replacement.

Color of media: _____ (Blue / Pink / White / Other)

4. EcoTex Air Sensor

The EcoTex Air Sensor has two display LEDs. Note the current status of the LEDs.

Green LED: _____ (On, Off or Flashing)
Red LED: _____ (On, Off or Flashing)

Summary of LED Indicators

Green LED	Red LED	Description
Flashing	Off	The head is in a cleaning cycle
On Solid	Off	The unit is powered and functioning normally
On Solid	Flashing	Ambient ozone level above high-limit set-point – Relays Open
Flashing	Flashing	Sensor head failure – Relays Open

System Fault / High Temp:

The High Temp light illuminates when a drive board observes an error during ozone generation. Look to the drive board and note the "Fault" LED and any pattern to its flashing.

Drive Board #1
Ozone LED -*Amber*: _____ (On / Off)
Power -XMFR -*Green*: _____ (On / Off)
Power - 12V -*Green*: _____ (On / Off)
Fault LED -*Red*: _____ (On / Off / Flashing 1 / 2 / 3 beat pattern)

(ECO4 Only)
Ozone LED -*Amber*: _____ (On / Off)
Power -XMFR -*Green*: _____ (On / Off)
Power - 12V -*Green*: _____ (On / Off)
Fault LED -*Red*: _____ (On / Off / Flashing 1 / 2, / 3 beat pattern)

Shown: CCA1231 Drive Board LEDs

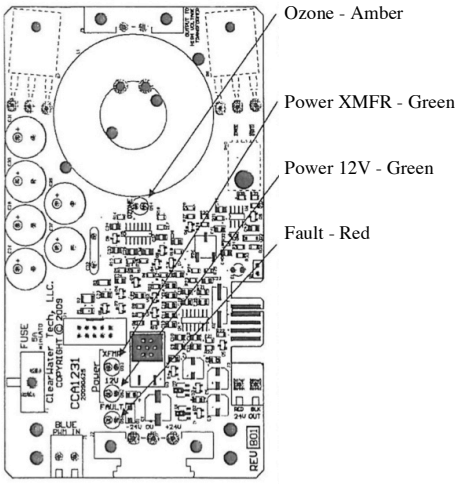

ClearWater Tech, LLC.
Toll Free: 800.262.0203 • Ph: 805.5449.9724 • Fax: 805.549.0306
850-E Capitolio Way, San Luis Obispo, CA 93401 • email: service@cwtozone.com • www.cwtozone.com 072213

Miniseries Ozone Generator Troubleshooting

FOR USE WITH CD10, CD10/AD, CD12 & CD12/AD

Please run through all troubleshooting sections to insure proper operation, the more common symptoms are listed here:

System does not turn on or off when it is supposed to. No lights are illuminated.

- Normally the system will respond by a vacuum switch signal to turn off and on when the vacuum of the venturi is present or not. If there is not enough or no vacuum at the venturi the system will not respond properly.
  - Look to the *Gauge Readings* section of this troubleshooting guide for assistance with this issue, check for leaks and proper gauge readings and adjust the vacuum switch if needed.
- This could be a power supply issue if the unit never turns on, as opposed to never turning off.
  - Look to the *Display Lights* section for assistance with no lights being illuminated.

Some lights are illuminated, but none are ozone lights.

- This is usually a control or circuit board issue.
  - Look to the *Display Lights* section for assistance.

Low ozone output is suspected / Crystals are pink or white in color.

- This is normally resolved with maintenance, but there are a few hardware components to check for proper operation.
  - Look to the *Colored Crystals* section for assistance.

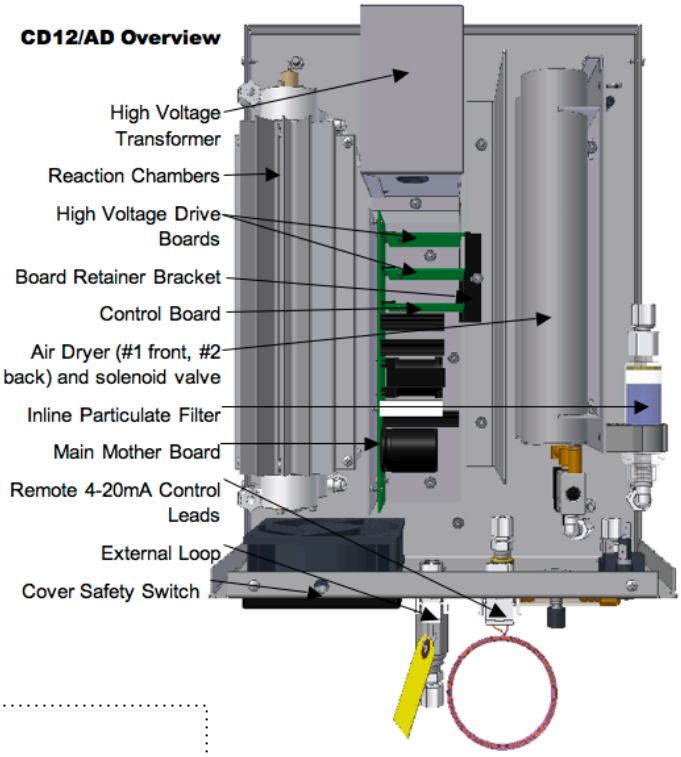

Pictured is the CD12/AD, the components of other Miniseries systems will be similar, and are often interchangeable.

Troubleshooting Contents:

Display Lights - These LEDs will show the current status of the system and if it is generating ozone at this moment.

Colored Crystals - In "/AD" systems, colored silica gel crystals are visible through the cover. The "good" color is blue. In non-/AD systems, the inline particulate filter contains silica gel beads. We're looking for these beads to be blue in color.

Gauge Readings - If installed, the gauge assembly can tell you the air from the generator is being drawn into the water at the proper rate. Additionally, the vacuum reading verifies that ambient air is not blending in at any point, which would reduce the system's effectiveness.

Hardware Inspections - The end of the guide goes over inspection of important components and **inspection in the case of water damage.**

Before you start:

- When adjusting or replacing components within the ozone generator, turn the system off and deny the power cord connection either at the ozone generator or at the outlet.
- When observing operation of boards or other components with the cover removed, a cover safety switch will have to be manually triggered for operation.
  - When operating with the cover removed, do not come near or in contact with the white wire that connect to the top of a reaction chamber. Do not install or remove circuit boards while the unit is powered. If the unit's model ends in /AD, be aware that at least one of the air dryer chamber cylinders may be very hot, **do not** touch them.
  - Look to the inside of the cover for the peg that normally presses the switch down and install a pencil or something similar to depress the switch to operate with the cover removed.
  - If you wish to still have display lights illuminated during operation with the cover off the unit, leave the wires connected to the cover and simply hold it elevated, keeping sure to not touch the chassis to the upper area of the reaction chamber. Otherwise, disconnect wires from the cover (ribbon cable from the control board and ground wire from the cover).
- Read through each troubleshooting section before performing the tests to insure the tests are performed correctly the first time.
- A multi-meter is recommended for some tests, but is not vital to troubleshooting.

Miniseries Ozone Generator Troubleshooting

FOR USE WITH CD10, CD10/AD, CD12 & CD12/AD

Display Lights

The lights to focus on are the upper set of ten lights labeled "Ozone Output" these are the usually the red triangle lights.

If these lights are illuminated, the generator is generating ozone*.

Confirm control of the ozone output:

- If a controller is automatically varying the ozone output of your system, disconnect the 4-20mA control plug (orange & purple wires) from the unit before manually adjusting the output.
- Turn the output control knob back and forth to cause the lights to go up and down.
  - This is the black knob, with a white stripe located on the underside of the unit.

If you have full control of the display lights, we can expect all the circuit boards to be functioning properly.
Move on to inspecting the colored crystals in the next troubleshooting section.
*Note: In the Miniseries systems it is a rare occurrence to have full control of the display lights, yet you've confirmed that no ozone is being generated. If this is the case, the transformer has failed and requires replacement. The *Verify ozone generation* steps in this section go over the details to confirm no ozone is being generated

Ozone Generator LED Display

LED	Function	CD10	CD10/AD	CD12	CD12/AD
OZONE OUTPUT	The ten LEDs represent 0-100%, minimum to maximum ozone output. Each LED is equal to 10% output. These LEDs can be adjusted with the manual output control knob located at the bottom of the ozone generator or automatically with a remote 4-20mA control signal.	MAX OZONE OUTPUT MIN	MAX OZONE OUTPUT MIN	MAX OZONE OUTPUT MIN	MAX OZONE OUTPUT MIN
POWER	Main Power is "ON" to the ozone generator, when LED is illuminated.	POWER	POWER	POWER	POWER
HV DRIVE	Power is being sent to the high voltage drive board, when the LED is illuminated.	HV DRIVE	HV DRIVE	HV DRIVE 1	HV DRIVE 1
EXT LOOP	The External Loop has continuity through it when the LED is *not* illuminated, which indicates ozone is being produced. The External Loop *does not* have continuity, when the LED is illuminated, which indicates no ozone production.	EXT LOOP	EXT LOOP	EXT LOOP	EXT LOOP
HIGH TEMP	The High Temp LED will not be illuminated during normal operation. If the ozone generator's internal temperature is in excess of 150˚F the High Temp LED will illuminate, which will also discontinue ozone production.	HI TEMP	HI TEMP	HI TEMP 1	HI TEMP 1
AIR PREP	CD10/AD and CD12/AD Only: The Dryer Timer LED will flash continuously during normal operation and indicates that the dryer timer cycle is operating correctly.		AIRPREP	HV DRIVE 2	HV DRIVE 2
DRYER 1	CD10/AD and CD12/AD Only: DRYER 1 LED will be illuminated when dryer chamber 1 is heating.		DRYER 1	EXT LOOP	HI TEMP 2
DRYER 2	CD10/AD and CD12/AD Only: DRYER 2 LED will be illuminated when dryer chamber 2 is heating.		DRYER 2	HI TEMP 2	EXT LOOP
					AIRPREP
					DRYER 1
					DRYER 2

Part numbers:
ELTR100 - Transformer for single reaction chamber Miniseries system (CD10 & CD10/AD)
ELTR105 - Transformer for dual reaction chamber Miniseries system (CD12 & CD12/AD)

Symptoms in this section

- No lights displayed
- No ozone output lights illuminated, but some lights are illuminated on lower half of the display
- Some or all of ozone output lights illuminated, but no control of ozone output
- Blinking display lights
- Ozone generator operates normally for a random length of time, and then the display lights shut off (unit turns off)

Troubleshooting steps:

No lights displayed

Confirm the system is powered and operational by verifying the cooling fan in the bottom left of the unit is spinning.
If the cooling fan is spinning, it is likely the display board is either not connected or functioning.

- Turn off the ozone generator, remove the cover and reattach the LED display board in the cover to the control board with its ribbon cable.
  - Be sure all the pins on the connector make it into the proper slots of the control board.
  - There may be silicon applied on the outside of the two connections to keep it from pulling free during shipping, cut or pull the Silicon away.
- If this does not re-establish display lights (re-verify the cooling fan is spinning), replace the LED display board.

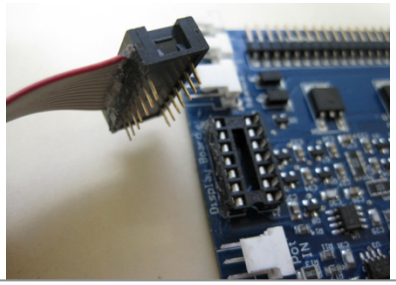

Display board ribbon wire disconnected. Note: Silicon removed

If the cooling fan is not spinning, we can suspect the motherboard for the unit is either not receiving power or functioning.

- Confirm the outlet the power cord is plugged into has power (using a multi-meter or another corded device).
  - If this is a wall outlet, check the Ground Fault Circuit Interrupter (GFCI) by pressing Reset on the outlet. If this trips again, we can suspect one or both heating elements of the air dryer have been compromised. Refer to the *Hardware Inspections* section of this guide to verify.
  - If the outlet is an AIF box provided with an Apex package (part of the ozone installation), and there is no power, it is likely the vacuum switch not providing the signal to energize the AIF's outlets. Refer to the *Gauge Readings* section of the troubleshooting guide for steps regarding the vacuum switch.
- Confirm the black, plastic on/off switch of the unit is switched to "on" - the switched should be pressed down on the right side.
  - The switch is located next to the power cord connection.
- Confirm the cover safety switch is depressed (even if the cover is currently on), see *Before you start* section earlier in the guide.
  - If the switch is suspected of being not functional, it can be replaced or bypassed by connecting its wires together.

- Confirm the fuses are healthy. There are power entry fuses located near or in the same module as the power cord connection (depending on version), both accessed with a small flat head screwdriver. The other fuse is located at the base of the motherboard, which runs the length of the ozone generator.
- If a fuse is popped, replace it, if any one of them pops again; replace the motherboard assuming there are no obvious shorts in the wires between the power cord and motherboard.
  - If the motherboard fuse is popped, it is unlikely that replacement of this fuse will resolve the issue, most of the time the motherboard will require replacement, but it there is a chance.

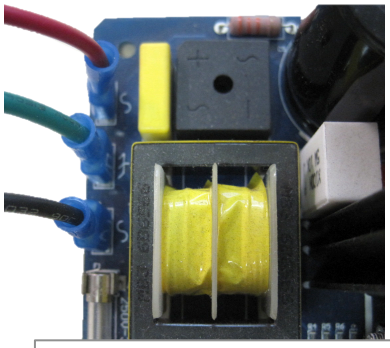

Motherboard power input wires

If power is delivered to the unit via the power cord, the on/off switch is in the "on" position, the cover switch is depressed, and the fuses are healthy, we expect the motherboard (power supply) will need replacement. Replace the motherboard or perform the final test to confirm.

Verify voltage is being delivered to the motherboard.

- At the bottom of the motherboard there are two 18 gauge wires, one red and one black. A green ground wire is present between these connections in current versions of the board. Disconnect the black wire and red wire
- Verify you have the expected (outlet) AC voltage reading on these two wires.
  - The voltage needs to be in the range of 90-260VAC 50/60 Hz.

If the expected voltage is present, the motherboard (power supply) will require replacement.
If there is no voltage present at these two wires, go back and individually test the connections and components listed above, one of these is not functioning.

Part numbers:

ELPC5054SA - Display board with ribbon cable - CD10
ELPC5050SA - Display board with ribbon cable - CD10/AD
ELPC5052SA - Display board with ribbon cable - CD12
CCA1350SA - Display board with ribbon cable - CD12/AD
CCA1325SA - Motherboard (power supply) for all Miniseries units
SWT55 - Replacement cover safety switch
FUS20 - 5Amp slow blow fuses (power entry)
FUS15 - 3Amp slow blow fuse (motherboard)

No ozone output lights illuminated, but some lights are illuminated on lower half of the display:

Look for any red lights on the lower half of the display board. There are two possibilities, the "EXT LOOP" and "HIGH TEMP" lights. If either of these is illuminated, ozone output will be disabled.
The third option is the lack of the "AIR PREP" light not blinking steadily, but instead is off.

External loop

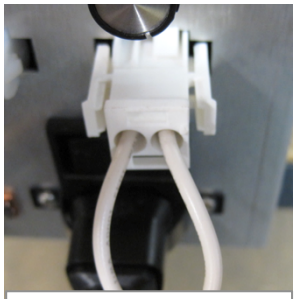

External loop jumper

EXT LOOP
If the "Ext Loop" (also called "external loop" and "dry contact loop") light is illuminated, the ozone generator will go into a standby mode, no ozone will be produced.
The external loop connection is on the underside of the ozone generator; it is a 2-position white plug (female). It may have something plugged into it currently. More information can be found in the Electrical chapter of the installation & operation manual.

Note: CD10 and CD12 ozone generators purchased in Apex package will normally have a jumper loop installed, this plug is supplied with the unit in its parts bag. CD10/AD and CD12/AD purchased in Apex packages will have the external loop connected to the vacuum switch of the gauge assembly. Perform the test below, and if the external loop light turns off, refer to the *Gauge Readings* section of this guide to set up airflow, vacuum levels and adjust the vacuum switch as needed.

If the EXT LOOP light is illuminated attempt to turn it off in order to re-enable ozone output (as a test).

- Disconnect the plug currently installed into the external loop and install the external loop jumper and confirm the EXT LOOP light turns off, ozone output should be enabled now.
  - If the jumper connection is not available, a bit of wire or a non-coated paperclip will do the same job. **Note:** This can be done on the ozone generator only. Do not use a paperclip or completely bare wire in the 2-position female plug on the AIF box (if installed), this connection will have at least 24V on it.
- If the EXT LOOP light turns off go back to the start of this *Display Lights* section to confirm proper operation, if there is an issue follow the new symptom and troubleshooting steps.
  - If the ozone generator operates fine, but the EXT LOOP light only turns off when manually jumped out, follow the wire normally connected to the external loop connection and investigate why it is not closing the circuit properly. Normally this is connecting to a vacuum switch in t he case of an "/AD" model ozone generator, refer to the *Gauge Readings* section of this guide to investigate airflow, vacuum and vacuum switch issues as per the above note.

Miniseries Ozone Generator Troubleshooting

FOR USE WITH CD10, CD10/AD, CD12 & CD12/AD

If the EXT LOOP light does **not** turn off when manually jumped out we have to look into possible faulty wiring or issues with the motherboard itself.

- Disable power to the unit and open the cover of the unit. Locate and disconnect the External Loop connection on the motherboard itself, labeled J4.
- Install a jumper connection on the two pins of the External Loop connection of the motherboard. Turn the system back on and confirm the EXT LOOP light has turned off.
- If a jumper is not available, any metal item can be used to bridge these connections such as flat head screwdriver.
- **Note: Do not install a jumper or bridge the Fan connection pins, labeled J5**. These are located next to the External Loop connections and will have a white plug with blue and red wires installed. Bridging the fan connection pins will cause damage to the motherboard.
  - If the EXT LOOP light turned off, go back to the start of this *Display Lights* section to confirm proper operation, if there is an issue follow the new symptom and troubleshooting steps.
- Assuming there is now normal operation, examine the wire connection between the motherboard and the white External Loop female connection on the underside of the unit for corroded connections that can be cleaned or frayed wires that can be replaced.
- If the EXT LOOP light does not turn off after manually shorting the External Loop wiring connection (J4) on the motherboard, replace the motherboard.

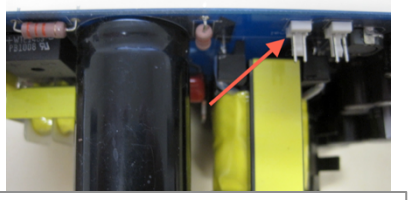

External Loop wiring connection

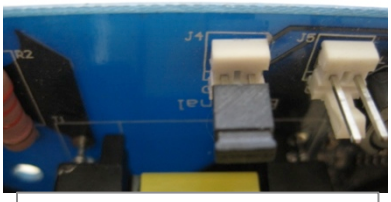

Jumper installed on External Loop connection

Part numbers:
CCA1231SA - Replacement motherboard (power supply) for all Miniseries
ST68SA - MTA Punch tool for connection at motherboard
ST67 - Amp pin removal tool for External Loop connection
ST65 - Amp pin crimping tool for External Loop female connection
CON125 - Amp pin, female for External Loop female connection
CON130 - Amp pin, male for External Loop male connection
ECC10 - Shorting jumper connector

HIGH TEMP

If the HIGH TEMP red light is illuminated, ozone output will cease as an internal thermostat has tripped. Confirm the cooling fan is operating and its filter is clean. If the cooling fan seems to be operating properly, and there is no visible heat damage to the circuit boards, then replacement of the drive board(s) will resolve the issue.

The CD12 & CD12/AD units have two drive boards, and two HIGH TEMP lights. Remove one drive board from the unit as a test to confirm which drive board is causing the issue and replace it. The boards have different part numbers. The middle board has tape on the heat sink and the jumper positions on the board are different.
Part numbers:
FA47 – Replacement cooling fan for Miniseries system
FA40 – Replacement cooling fan filter (included in maintenance kit)
ELPC5040SA – Drive board for Miniseries system (only drive board in CD10 & CD10/AD - Upper drive board in CD12 & CD12/AD)
ELPC5042SA – Secondary drive board for CD12 & CD12/AD (middle board)

AIR PREP

If the AIR PREP light is not blinking steadily, but instead is remaining continuously on or off, this will require the replacement of the air dryer board. In the case of a CD12/AD, this board also serves as the control board of the system.

Part numbers:
CCA1232SA - Control board / Air dryer board - CD12/AD
ELPC5020SA - Air dryer board - CD10/AD

Miniseries Ozone Generator Troubleshooting

FOR USE WITH CD10, CD10/AD, CD12 & CD12/AD

Some or all of ozone output lights illuminated, but no control of ozone output:

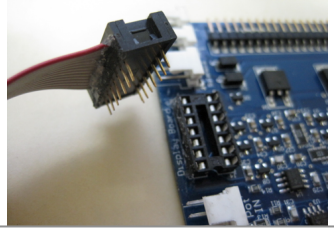

Display board ribbon wire disconnected. Note: Silicon removed

This is usually coupled with no ozone output detected when blowing air through the unit. This is a display board issue.

- Disconnect the ribbon cable from the display board and run the system
  - There may be silicon applied on the outside of the two connections to keep it from pulling free during shipping, cut or pull the Silicon away.
  - As the display board is disconnected, there will be no display lights.
- Listen for the high-pitched arcing noise of ozone output
- Blow air through the unit to confirm ozone output as detailed in the steps below.
- **If ozone output is confirmed**, look to the ribbon cable connection for bent pins, carefully bend them back and replace. If ozone output is still not generated, or there are no bent pins, replace the display board.
  - The unit can be operated with the display board disconnected (generating ozone) while replacement parts are obtained.
- **If there is no ozone output detected with the ribbon cable disconnected**, disconnect and remove the control board from the motherboard. Turn the unit on and listen for the arcing noise and blow air through the unit to confirm ozone output.
- **If ozone output is now confirmed**, the control board or the potentiometer that connects to it is at fault.
  - The potentiometer can be checked with an ohms resistance test (50k ohms) or both components can be replaced to be certain.
  - The unit can be operated with the control board disconnected (generating ozone) while replacement parts are obtained. Ozone output less than 100% cannot be set.
- **If ozone output is not detected with the control board removed** from the ozone generator, the drive board(s) will require replacement.
  - This is assuming the cooling fan is powered and spinning, proving the motherboard is operational.

Part numbers:

ELPC5054SA – Display board with ribbon cable - CD10
ELPC5050SA – Display board with ribbon cable - CD10/AD
ELPC5052SA – Display board with ribbon cable - CD12
CCA1350SA – Display board with ribbon cable - CD12/AD
CCA1232SA – Control board / Air dryer board - CD12/AD
ELPC5031SA – Control board - CD10, CD10/AD, & CD12
WA237 – Replacement potentiometer wire assembly - All Miniseries
ELPC5040SA – Drive board for Miniseries (only drive board in CD10 & CD10/AD, Upper drive board in CD12 & CD12/AD)
ELPC5042SA – Secondary drive board for CD12 & CD12/AD (middle board)

To verify ozone generation, detect the scent of ozone anywhere in the installation (e.g. the tubing connection on the contact tank's off-gas vent). Due to the ozone generator being "all-or-nothing" if some ozone is detected, we know that the reaction chamber and related circuitry is operational. If we cannot detect ozone in an easy fashion, we can test the ozone generator directly by blowing air through it:

- Disconnect tubing from the underside of the air inlet of the ozone generator; the intention is to blow air into this fitting.
  - A common location is the underside of the airflow (SCFH) gauge mounted on the underside of the ozone generator.
  - If no gauge is installed, it will be a brass connection on the underside of the ozone generator, in an ozone model number that ends in "/AD" it will be the left-side brass connection we are interested in.
- Disconnect the ozone outlet of the ozone generator.
  - This is a stainless steel fitting, commonly with a grey check valve installed in this port. Remove the check valve, as blowing air through it can be difficult.
- Apply power, enable ozone output and allow it to run for 30 seconds
- Cup your hand around the ozone outlet fitting and flow air into the brass inlet
- Detect the scent of ozone in your hand
  - The smell of ozone is sharp, sweet and can be smelled after a thunderstorm, it is often described as similar to chlorine bleach.
  - If ozone is detected, then the generator is working.
  - If there is no scent of ozone, note down all display lights, gauge readings. Write down the model and serial number of the unit, consult the manual or contact your distributor or ClearWater Tech to continue troubleshooting.

Underside of a CD12/AD

Gauge assembly

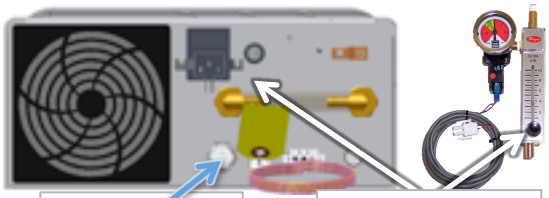

Ozone out here

Flow air into one of these two points

Blinking display lights

When the output display lights of the ozone generator turn off and on in a repeating cycle, look to the gauge assembly while this is occurring.

- **If the round vacuum gauge's needle is drifting left and right** at the same rate of the pulsing of the lights, the vacuum switch is triggering off and on due to an imbalance in the vacuum of the venturi injector and pressure of the oxygen concentrator. See the *Gauge Readings* section of this guide to resolve this issue.
- **If the vacuum gauge's needle is unmoving** from whatever number it is at, this is likely a circuit board issue, see the steps below to diagnose a possible power supply issue.

Color-coded vacuum gauge

Miniseries Ozone Generator Troubleshooting

FOR USE WITH CD10, CD10/AD, CD12 & CD12/AD

Ozone generator operates normally for a random length of time, and then the display lights shut off (unit turns off)

Both of these symptoms are the affect of the motherboard (power supply) shutting off or being reset repeatedly.
Usually (95% of the time) replacement of the motherboard will resolve the issue.
If replacement of the motherboard did not resolve the issue or you wish to verify prior to ordering parts, confirm one of the expansion boards is not causing the issue.

- Read through all of the steps before performing this test.
- When disconnecting or reconnecting boards, insure the unit's power cord is disconnected.
- When testing for operation, insure the cooling fan is spinning, proving the motherboard is powered as the display board may be disconnected.
- The display board will not cause this issue. If it is malfunctioning it will cause odd / no lights and no ozone output, see above for details.

1. Disable power and disconnect all expansion boards from the motherboard.
   a. The expansion boards slide out to the right of the motherboard; wires can be left attached to the boards.
   b. A bracket is installed to the right of these boards to prevent them from shifting in shipping. This bracket will need to be removed. Securing it is an 11/32" nut.
   c. Additionally, a small amount of Silicon may be applied to the left edge of the expansion boards where they meet the motherboard. Cut or break this connection when removing the expansion boards.
2. Power the system and observe operation; the cooling fan should be spinning.
3. **If the cooling fan does not spin**, confirm power is being delivered to the motherboard per the steps listed in the *Display Lights > No lights illuminated* section of this guide.
   a. If power is being delivered, and there is no fan movement, replace the motherboard.
4. **If the cooling fan is spinning**, we can assume for the moment the motherboard is healthy. It is possible that the motherboard cannot handle the load of all expansion boards installed.
5. Systematically re-install expansion boards with associated wiring board by board. Start at the lowest position expansion board and power the system after each board installation.
6. Confirm fan operation and new features that become available when boards are added (ex: display lights).
7. When the motherboard's original symptoms occur (shutdown), we have found a suspect expansion board.
   a. Disconnect this suspect board and continue with the rest of the systematic expansion board testing.
   b. Note: If the third and final board causes the symptoms to re-appear, shut the system down and remove the lowest position board. Leave the upper two boards installed and power the system once more. If the cooling fan and other features operate fine, our issue is not with the top drive board. The motherboard cannot handle the full load and will require replacement.
8. Install suspect board(s) individually on the motherboard and power the system testing it alone. A return of the original symptoms confirms this board requires replacement. The part number is printed on the board.

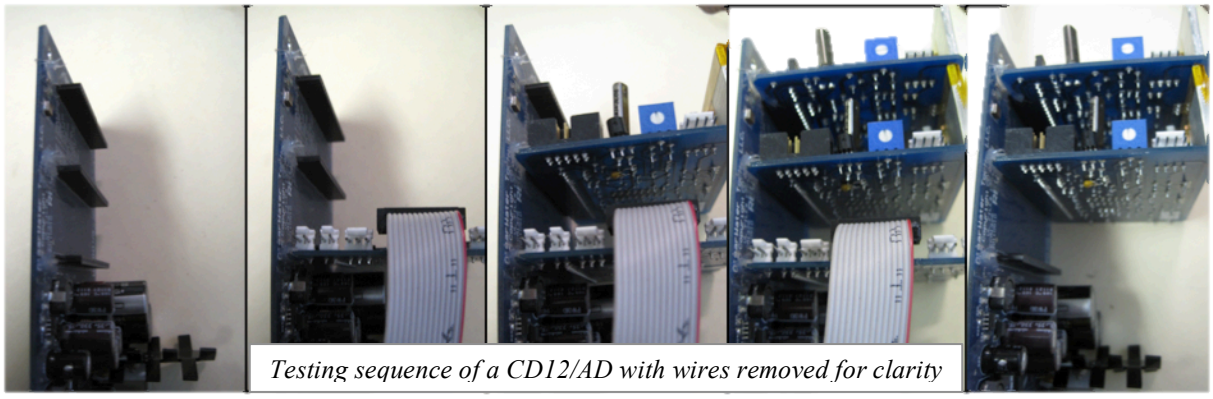

Testing sequence of a CD12/AD with wires removed for clarity

Part numbers:
CCA1231SA – Replacement motherboard (power supply) for Miniseries
CCA1232SA – Control board / Air dryer board - CD12/AD
ELPC5020SA – Air dryer board - CD10/AD
CCA1232SA – Control board / Air dryer board - CD12/AD
ELPC5031SA – Control board - CD10, CD10/AD, & CD12
ELPC5040SA – Drive board for Miniseries (only drive board in CD10 & CD10/AD, Upper drive board in CD12 & CD12/AD)
ELPC5042SA – Secondary drive board for CD12 & CD12/AD (middle board)

Miniseries Ozone Generator Troubleshooting

FOR USE WITH CD10, CD10/AD, CD12 & CD12/AD

Colored Crystals

Inline particulate filters The original blue and two colors that indicate a nonfunctioning air preparation system

Blue silica gel crystals are installed in each model ozone generator. CD10/AD units also have a chamber visible through the cover that has mixed blue and white crystals. This is at times referred to as indicating desiccant media.

Ozone generators need to be supplied with dried air or oxygen to produce the expected amount of ozone. CD10/AD and CD12/AD have internal air dryers for this purpose. CD10 and CD12 models are commonly paired with oxygen concentrators.

The color of the crystals serves as a status check on the air supplying the ozone generator. There should be no moisture present in the output of an air dryer or oxygen concentrator.
Any moisture passing through the crystals will be absorbed by the silica and produce a color change of blue, to pink and finally to white.

A color change from blue to pink or white indicates a possible failure of the air dryer or oxygen concentrator and will severely reduce ozone output.

- CD10/AD and CD12/AD systems: Perform the recommended annual maintenance. Replacement of the air dryer media and all indicating media is a part of this maintenance. Instructions are included with the kit.
  - It is recommended to inspect the air dryer hardware as per the *Hardware Inspection* section of this guide.
- CD10 and CD12 systems: perform the recommended annual maintenance to the ozone generator in addition to inspecting and verifying the health of the associated oxygen concentrator. Information

Part numbers:

ASP111B - CD10 annual maintenance kit
ASP110B - CD10/AD annual maintenance kit
ASP112 - CD12 annual maintenance kit
ASP115A - CD12/AD annual maintenance kit

DES12 - Individual bag of air dryer media
DES16 - Individual bag of mixed blue & white indicating media
FLT34 - Replacement inline particulate filters

is available in the associated manual and our website www.cwtozone.com

Gauge Readings

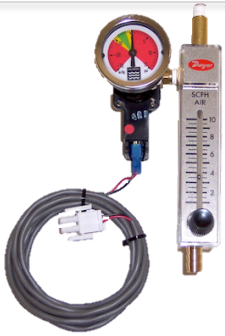

Gauge assembly including vacuum switch

Most Miniseries systems have gauge assemblies installed, they are included in all Apex packages. If the installed ozone generator does not have a gauge assembly, it can be added on.
A gauge assembly will let a user know two things:

1. Optimum ozone output will be obtained when the vacuum and airflow readings are in their ideal ranges.
2. A proper vacuum reading will show the gas being drawn from the ozone generator is flowing into the water. To clarify: There is no air leak causing ambient air to be drawn into the water instead of ozone.

In this section:

- Steps to set up or recalibrate airflow for the ozone system
- No suction at the venturi injector
- Finding an air leak
- Resetting the vacuum switch

First, note the current gauge readings during operation (water pumping through the venturi, generating vacuum).

- The round vacuum gauge's needle should be in the green range (-3 to-8"Hg). The vacuum switch has a set point of -3"Hg
  - **If the needle is to the left of -3"Hg**, ozone output is expected. If the airflow reading (see next step) is also in the correct range, the venturi injector plumbed into the waterline is creating suction. The gas flowing out of the ozone generator is getting into the water.
    - If the needle is to the left of -8"Hg (out of green and into red), move the needle back into the green range by opening the black knob at the base of the adjacent airflow gauge.
  - **If the needle is to the right -2"Hg** and possibly in the red positive range, there is either not enough suction at the venturi, there is an air leak or in the case of a positive reading - no suction at all. See the steps below for setting up the airflow for the ozone system to isolate the issue.
  - **If the needle constantly moves left and right,** either the vacuum break assembly does not have enough water within it (see *notes on the vacuum break* below) or the suction generated by the venturi is not enough to overcome the pressure on the output of the oxygen concentrator. See the steps below for setting up the airflow to balance the system.
- The airflow gauge's floating ball ideal reading will depend on the ozone generator model. Too high or too low readings will result in less ozone or effectiveness in the water.
  - CD10 & CD10/AD have an airflow range of 3-4 SCFH the optimum is **4** SCFH
  - CD12 & CD12/AD have an airflow range of 6-8 SCFH the optimum is **8** SCFH

Miniseries Ozone Generator Troubleshooting

FOR USE WITH CD10, CD10/AD, CD12 & CD12/AD

Steps to set up or recalibrate airflow for the ozone system:

Injector manifold with blue bypass valve

Notes: If the gauge readings show the needle in the green range and the SCFH ball is in the range appropriate for the ozone generator, these steps are unnecessary. It does not matter what steps were involved in achieving the gauge result, the steps below are one way of achieving them. Steps following the ❖ symbol are intended for installations using an oxygen concentrator.

❖ Disconnect the braided oxygen tubing from the bottom of the gauge mounted underneath the ozone generator.

- Turn on water flow through the venturi injector and look to the airflow (floating ball) gauge on the underside of the ozone generator. Turn the black knob counter-clockwise (open) completely; the needle on the round gauge should be at zero due to no restriction.
  - The floating ball will show how much airflow is being generated by the suction of the venturi.
- Adjust only the bypass valve at the venturi injector to raise or lower the airflow gauge's floating ball to just above our target airflow. We want to generate suction above our target airflow rate.
  - CD10 & CD10/AD adjust only the injector bypass valve until 6-7 SCFH displayed on airflow gauge
  - CD12 & CD12/AD adjust only the injector bypass valve until 10-11 SCFH displayed on airflow gauge
  - If the airflow gauge's ball remains at zero no matter the adjustments, proceed to the section regarding *No suction at venturi*. Afterwards, return to set up airflow again.
  - If the airflow gauge's ball rises above 1 SCFH but cannot rise up to above the target SCFH reading, proceed to the section below regarding *Finding an air leak*. Afterwards, return to set up airflow again.

❖ Plug the oxygen concentrator's power cord into a wall outlet and set the oxygen concentrator's airflow gauge (not the ozone generator's gauge) to the optimal flow rate while the tubing is still disconnected from the gauge.
  - CD10 & CD10/AD adjust oxygen concentrator's flow gauge to 4 SCFH
  - CD12 & CD12/AD adjust oxygen concentrator's flow gauge to 8 SCFH
  - If the oxygen concentrator's gauge will not rise up to the desired SCFH, there is an issue within the oxygen concentrator. Consult the associated manual for assistance resolving the issue. Afterwards, return to set up airflow again.

❖ Reconnect the oxygen tubing to the underside of the gauge assembly. Leave the oxygen concentrator powered.

- With water flowing through the venturi, close (turn clock-wise) the black knob on the ozone generator's gauge assembly to lower the airflow reading to the target SCFH. Confirm the needle of the round vacuum gauge moves to the left into the green range.
  - CD10 & CD10/AD - 4 SCFH
  - CD12 & CD12/AD - 8 SCFH
  - **If the needle does not move left into the green**, slightly increase the suction at the venturi (close the bypass valve more) and/or reduce the output of the oxygen concentrator (if installed) to move the needle comfortably into the green range.
    - It is more important to have the needle well into the green range of the gauge rather than having optimal SCFH readings, the installation will be fine if you within the acceptable SCFH range listed above.
    - If the needle still will not move to the left after adjustments in the previous step, confirm there is no air leaks by referring to the *Finding an air leak* section below. Afterwards, return to set up airflow.
  - **If the needle moves into the green range but the SCFH is too low**, restart this step by making more adjustments to increase suction at the venturi, and reducing oxygen concentrator flow (if installed). If the SCFH is still too low, there are a few options:
    - Confirm there are no leaks by referring to the *Finding an air leak* section below. Afterwards, return to set up airflow.
    - If no leaks are found, remove a possible throttle in the ozone line. Remove the secondary check valve underneath the ozone generator assuming a vacuum break assembly (pictured in the *Finding an air leak* section) is installed.
    - Increase water flow or pressure to the pipe where the injector is plumbed by driving up a variable speed pump or routing more water through the bypass that sends water to the venturi (while still maintaining minimum flow rates for any installed heater).
    - Attempt to run the system with a lower vacuum setting than normal: Bring the SCFH up to acceptable levels and if the needle of the vacuum gauge is still to the left of zero, reconnect all tubing and power cords to default positions and refer to *Resetting the vacuum switch* section below.
    - Change the injector manifold to a lower flow rate / pressure model. Consult your distributor or CWT regarding this.

❖ Reconnect the power cord for the oxygen concentrator back to the AIF box where it was originally installed.

- Confirm the system turns off and on whenever water flow is given to the venturi injector.
  - If the system does not turn off when the vacuum is denied, increase vacuum on the system by moving the needle farther into the green range.
    - If this does not work, refer to *Resetting the vacuum switch* section below.

Miniseries Ozone Generator Troubleshooting

FOR USE WITH CD10, CD10/AD, CD12 & CD12/AD

No suction at venturi

Injector manifold with disconnected check valve assembly

Venturi injectors generate suction by creating a pressure differential upstream and downstream from where it is installed. There are many different models of venturi that operate at different pressures and flow rates. The bypass part of our venturi manifolds has a ball valve installed that allows us to adjust the flow rate through the venturi and thus the amount of suction.
Suction will be lost if less pressure than normal to the venturi, excessive backpressure downstream of the venturi or physical blockages occur at the suction port.

Notes on the check valve assembly: When water is flowing through the venturi, the check valve we add is not used. If suction is lost the suction port becomes inert, air does not enter nor does water flow outwards through the port.
Only in cases of excessive backpressure the pressure of a pump drive water up through the suction port of the venturi. In such cases the check valve will not be able to withstand the pressure of the pump and will become compromised and let water passed it. A vacuum break assembly will help keep the water out of the ozone generator in such a case.

When the water flow stops does the check valve come into play, as without flow the venturi is simply a tee in the waterline. Head pressure will exert itself against the check valve. If the air dryer or oxygen concentrator is compromised, the ambient air delivered to the ozone generator will both reduce ozone output and generate nitric acid. The nitric acid tends to flow down the ozone line to the venturi and become caught in the check valve.
Given enough time the nitric acid will build up to a solid core and keep the check valve stuck open. When the water flow stops, water will flow though the stuck-open check valve. Again, a vacuum break assembly will divert the water away from the ozone generator.

These troubleshooting steps are ideal for installations where the venturi was operating properly in the past, but is now no longer generating suction.

- When no suction is detected at the venturi, insure water is flowing through the venturi and slowly close the bypass valve on the manifold to hopefully generate suction.
- If no suction is created, unscrew the grey check valve assembly from the venturi.
  - If water starts seeping out of the threads while removing stop and tighten it back down. There is some sort of blockage downstream of the venturi (past any contact tank), find and resolve it to restore operation.
- If suction is present after the check valve assembly is removed, replace the check valve due to it being stuck closed or compromised with nitric acid.
- If no suction is present at the venturi with check valve removed, examine the suction port and inside of check valve assembly for debris that would restrict air flow and remove any if present.
- Assuming there is no debris look to the off gas vent of the contact tank (if installed). It should be at least halfway filled with water. If it is empty, shut down the system (and all pumps) and remove the vent from the tank. The bowl can be unscrewed from the housing and any debris blocking the outlet port on the inside will need to be cleaned out.

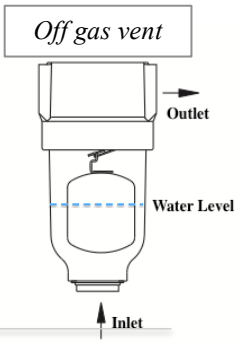

Finding an air leak

Isolating an air leak involves checking for sufficient vacuum at each tubing connection, starting at the venturi injector.
The usual leak point is the vacuum break assembly; some may wish to skip to the *Notes on the vacuum break assembly* below.

- Turn off the ozone generator.
- Disconnect the ozone tubing's compression fitting at the injector and place your finger over the fitting on the injector side
  - Hold your finger on the suction port for 5-10 seconds. You're going to use the tactile suction present to give you a baseline level of suction.
- Reconnect tubing and disconnect tubing at the next connection point.
  - Confirm the same level of suction is present after 5-10 seconds.
- A leak between two connections will initially feel normal, but the suction will decrease dramatically within the 5-10 second hold period.
- Leaks can be caused by untightened fittings, cut lines, leaks in the vacuum break, and/or leaks in the reaction chamber all are easily corrected.
  - Vacuum break assembly: See special note below.
  - Fittings: These compression fittings rarely become loose and cause leaks. They can be tightened and inspected. The paired ferrules under the caps need to be in the correct orientation to seal properly.
  - Ozone lines: These should be the Teflon lines provided with the parts bag with the unit, they will not degrade over time and only require replacement if physically cut.
  - Reaction chamber: Leaks within the reaction chamber are normally worn O-rings that require replacement involved in normal maintenance.

Compression fitting with ferrules shown

Miniseries Ozone Generator Troubleshooting

FOR USE WITH CD10, CD10/AD, CD12 & CD12/AD

Notes on the vacuum break assembly: This assembly was designed to keep water from flowing up the waterline and into the ozone generator. It does have a drain port open to atmospheric air. Verify that air is not using the lower half of the assembly, as it represents a leak of some kind. It should be filled with unmoving water.

-
- Verify water is present within the vacuum break assembly approximately to the fill level shown in the picture.
- Verify there are no bubbles in the water within the vacuum break.
  - Bubbles going up the tall side represent an air leak, ambient air being drawn in to the ozone line. Clean or replace the flapper valve at the base of the vacuum break.
  - Bubbles going up the short (drain) end of the vacuum break represent pressure in the ozone line and vacuum break. The oxygen concentrator is pushing air out of the line.
    - It is normal for these bubbles to appear for a short period of time when the system shuts down, the residual pressure bleeds out of the system here. There may be a smell of ozone during this brief time.
    - If the bubbles and/or smell of ozone is constant during operation or when the system is shut down, refer to the *Setting up the air flow* section above, and possibly the *Resetting the vacuum switch* steps below

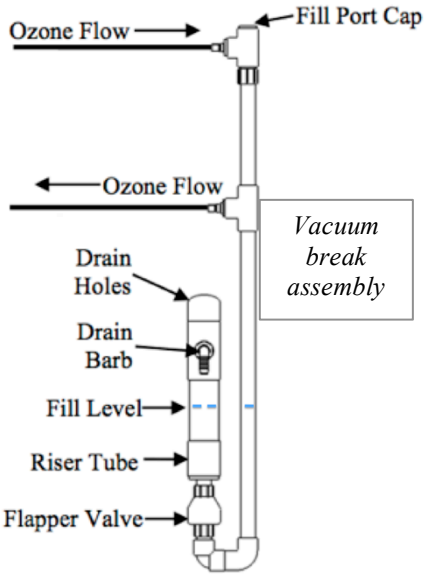

Resetting the vacuum switch

Follow these steps if the ozone generator does not trigger properly when the water flow turns on and off.

Note: Steps following the ❖ symbol are intended for installations using an oxygen concentrator.

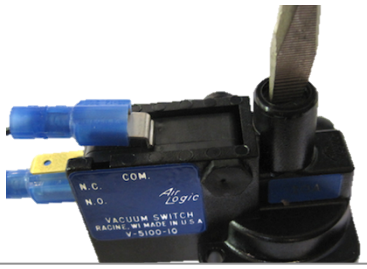

Vacuum switch with the setpoint being adjusted. Also shown are the default wire connections: COM & N.O.

❖ Plug the oxygen concentrator's power cord into a wall outlet; leave all other connections as normal. Doing this keeps the oxygen concentrator from turning off and on, changing the vacuum levels.

- Flow water through the venturi injector and adjust the needle of the vacuum gauge to -3"Hg or the beginning of the green range.
  - The reading of the SCFH floating ball does not matter for most of test; only pay attention to the needle until resetting up airflow in the last few steps.
- Locate the vacuum switch behind the color-coded vacuum gauge. On the backside of the vacuum switch is a slot for a flat-head screwdriver. This part is probably facing the wall. Turn the gauge assembly to the side to access the back of the black, plastic vacuum switch and find the slot. The gauges will now be pointed to the side.
- Insert a flat-head screwdriver into the slot, turn it clockwise and watch the ozone generator for ozone generation / reaction.
  - When found, stop turning or back up to the point where the reaction occurred.
  - If the screw sinks all the way in and stops no response from the ozone generator, then reverse direction of the screwdriver until the unit activates. Don't remove the setscrew completely from the back of the switch; you can pull it out accidentally.
    - If there was no response from the ozone generator between either extreme of adjusting the screw, confirm the vacuum levels are still what they were set to properly.
      - If the vacuum levels drifted, start the test again, and insure the vacuum levels remain the same throughout the steps.
      - If the vacuum levels remain unchanged, replace the vacuum switch.
- Once you find the point where the unit turns on, the vacuum switch should be set to turn on when this level of vacuum is achieved.

❖ Reconnect the oxygen concentrator's power cord back to the AIF box.

- Adjust vacuum and SCFH airflow readings to normal levels. **Move the needle to the left, deeper into the green.**
- Stop water flow through the venturi injector. Confirm if the vacuum switch releases and disables ozone output.
  - If the unit does not disable, reverse the direction of the setscrew slightly until the ozone system responds.
- Flow water again to confirm the ozone system comes back on properly; make a final adjustment to the setscrew if it does not respond.
- If the vacuum switch never seems to engage or disengage properly after major and minor adjustments see the *vacuum switch notes* in this section.
- Rotate gauge assembly back to the normal orientation.

Miniseries Ozone Generator Troubleshooting

FOR USE WITH CD10, CD10/AD, CD12 & CD12/AD

Notes on the vacuum switch not responding: This switch is sensitive to low levels of vacuum. If the system vacuum levels are set to the edge of green (-3”Hg), the vacuum switch may not release properly when the -3”Hg vacuum goes to zero.

- **If the vacuum gauge can be adjusted to the left-side of green** (-8”Hg), and maintain proper SCFH readings; go through the resetting the vacuum switch above and use -5”Hg as the setpoint level. Move the needle farther left to -6 to 8”Hg in the final steps (maintaining proper SCFH).
- If the vacuum gauge is **unable to pull into the green range while maintaining SCFH**, consult the following options to resolve the issue.
  - Route more water flow/pressure to the venturi injector to increase vacuum generated. This option is for side-stream installations with restriction valves in the mainline and/or installations with variable speed pumps.
  - Replace the venturi injector with a different model venturi that is better sized for this installation. Collect information before contacting your dealer or CWT. To properly size a venturi model we need the approximate water flow rate (GPM) and pressure (PSI) delivered to the venturi injector installation point. Additionally, anything downstream of the injector that would cause excessive backpressure would have to be compensated for (e.g. long vertical runs of pipe, venturi installed far below the water level of a pool, pop-ups on the return to the pool, etc…)
  - Adjust the setpoint of the vacuum switch to the level of suction and airflow you have. Attain what numbers you can on both gauges and adjust the vacuum switch to trigger on this level of vacuum and confirm proper operation.
  - Lower the airflow readings to minimum levels, sacrificing some ozone output, to move the needle farther to the left to allow the system to trigger properly. Most ozone systems are oversized and reducing ozone output is not a major issue, this is especially true for any type of system that recirculates the same body of water. Note: Systems with oxygen concentrators will have to have the concentrator’s airflow reduced.
  - Use a different control switch than a vacuum switch. The grey wires that connect to the Common and Normally Open contacts on the vacuum switch can be connected to another type of trigger that has the same contacts. Options include a pressure or flow switch in the waterline, a signal from a PLC, or a relay connected to the load side of the recirculation pump.
    - If using an oxygen concentrator, and we’re using something other than a vacuum switch, understand that it will possible to trigger ozone output while not generating vacuum at the venturi. This can cause an ozone leak into the area, which can be dangerous. It is best to couple this change with an ambient ozone monitor connected to this or another control circuit.
    -

Part Numbers:
GAG620 - Gauge assembly, 0-10 SCFH with vacuum switch
CKV21 - Replacement check valve for the venturi injector ¼” FPT x FPT
FTK134 - Common compression fitting ¼” Compression x ¼” MPT, Kynar material
DLV30 - Teflon ¼” ozone delivery line, sold by the foot.
VJB150 - Vacuum break assembly
CKV80 - Flapper valve for vacuum break
VAS7 - Replacement off gas vent
SWT90SA - Replacement vacuum switch, preset to -3”Hg

Miniseries Ozone Generator Troubleshooting

FOR USE WITH CD10, CD10/AD, CD12 & CD12/AD

Hardware Inspection

Follow this brief guide on verifying the subcomponents of a system are healthy when performing maintenance, general inspection, or assessing damage of a system.

In this section:

- Water damage
- Reaction chamber(s)
- Air dryer
- Cooling fan
- Vacuum break

Water damage

Water can be introduced to the ozone generator up through the ozone tubing from the venturi injector. This is described in the *Notes on the check valve assembly* earlier in this section.
If water is present within a reaction chamber when it is given voltage, we expect the dielectric glass to be shattered, brush compromised and likely the bottom end cap will be damaged. If no voltage was applied, the reaction chamber will just need cleaning. Inspection is needed to confirm which state the chamber is in. The circuitry and transformer of the unit tends to survive water damage just fine. A vacuum break assembly will prevent future issues of this water damage.

Note: If there is water detected within the ozone generator and a vacuum break assembly is installed, it is likely the oxygen concentrator failed within a higher humidity area. After becoming compromised the oxygen concentrator may collect water from the air and push it towards the ozone generator. This tends to compromised gauge assemblies and inline particulate filters, in addition to requiring repairing/replacing the oxygen concentrator. See the concentrators associated documentation.

Steps in assessing water damage:

- Deny power and remove the cover from the ozone generator
- Look for how far the water flowed up the system
  - Examine the ozone tubing for evidence of water such as droplets or water stains.
  - Water will collect in the inline particulate filter and any indicating media chamber.
  - Look for any water or sludge that flowed out of the top of the air dryer chambers. See page 1 of this guide for location of the air dryers.
- The locations of tubing and components with evidence of water will dictate what will require replacement or inspection.
  - Water up to the ozone generator, but none detected inside
    - Replace check valves, inspect reaction chamber to be certain of no damage and installation of vacuum break is recommended.
  - Water detected in the gauge assembly or inline particulate filter
    - Reaction chamber will need inspection/repair, replace vacuum switch, vacuum gauge and inline particulate filter
  - Water present in the indicating media chamber (CD10/AD only) and/or evidence of water in air dryer chambers (CD10/AD & CD12/AD)
    - Replace or clean out the indicating media chamber, and replace the air dryer assembly. It is expected that the air dryer media has turned into a difficult to clean sludge and it is more cost effective to replace the entire assembly. Otherwise inspect the solenoid valve and heating elements, and then perform normal maintenance (replacing media).
  - In the case of oxygen concentrators:
    - If water is pooling underneath them, it will be more cost effective to replace with a new concentrator.
    - If water is not collecting underneath, it will likely require new sieve media of some kind and purging of the lines, see the associated manual.

Part numbers:
CKV21 - Replacement check valve for the venturi injector ¼” FPT x FPT
CKV22 - Replacement check valve for the ozone generator ¼” MPT x FPT
VJB150 - Vacuum break assembly
SWT90SA - Replacement vacuum switch, preset to -3”Hg
GAG520 - Replacement vacuum/PSI gauge only, color-coded
GAG620 - Gauge assembly, 0-10 SCFH with vacuum switch
FLT34 - Inline particulate filter
ADP100 - Replacement air dryer assembly for CD10/AD
ADP203 - Replacement air dryer assembly for CD12/AD

Miniseries Ozone Generator Troubleshooting

FOR USE WITH CD10, CD10/AD, CD12 & CD12/AD

Reaction chamber inspection

*Good - High voltage wire **not** contacting metal*

Bad - High voltage wire contacting metal

Full disassembly and maintenance instructions can be found in the manual for the ozone generator as well as the maintenance instruction sheets.

Exterior inspection:

- Confirm the white high voltage wire that connects to the top of a reaction chamber is **not coming in contact** with the chassis or any other metal component.
  - This wire can be repositioned with a loose zip tie or trimmed with a new connector crimped on.
- During ozone production, no glow or flickering lights should be visible within the white Teflon end caps
  - If light is seen, this is a sign of a damaged dielectric glass. We can expect the dielectric glass to be cracked and possibly an end cap damaged.

Interior inspection:

- Deny power to the ozone generator
- Disconnect the high voltage wire from the reaction chamber(s).
- Disconnect the tubing connections on both ends of the reaction chamber(s).
- Remove the 4 nuts securing each chamber and remove the reaction chamber from ozone generator.
- Make note or mark the position of the end caps and their elbow fittings on the reaction chambers, during re-assembly the end caps will need to return to original positions.
- Remove retaining screws and washers from the two end caps (3 each).
- Using a gentle back-and-forth twisting motion, remove the non-high voltage end cap (the one without the high voltage attachment screw) from the heat sink/cathode assembly.
- A flat-head screwdriver may be used to gently pry the end cap off, as long as equal pressure is applied to each side of the end cap.
- Remove the high voltage end cap and dielectric from the heat sink/cathode assembly.
- The dielectric glass will be attached to the high voltage end cap, leave it connected for now.
-
- Inspect for damage
  - The dielectric glass should not be cracked/broken
  - The brush, visible through the glass, can be discolored without effect on ozone output
  - Teflon end caps should not be scorched, blackened, or have jagged cuts within it.
- Clean any moisture or nitric acid found on the exterior of the dielectric glass and interior of the heat sink and cathode assembly.
  - Denatured alcohol and/or a simple clean rag can be used.
- Assuming no damage is noted, reassemble the reaction chamber by installing the non-high voltage end cap to the heat sink cathode assembly.
- Insure no fingerprints or dampness are on the dielectric glass and reinstall into the heat sink cathode assembly, securing the non-high voltage end cap to keep it from pushing out.
- Rotate the end caps to original positions and reinstall retaining screws
- Reinstall assembled reaction chamber into the ozone generator, connect grounding nuts, tubing and high voltage wire connections.

Part numbers:

RCC53 - Miniseries end cap, high voltage end
RCC57 - Miniseries end cap, non-high voltage end
ORS50 - O-ring set for one Miniseries reaction chamber
FTK325 - Compression elbow for ozone tubing
RCC76SA - Dielectric assembly, glass and brush
HWS2009 - End cap retaining screw

1" Reaction Chamber - Exploded View

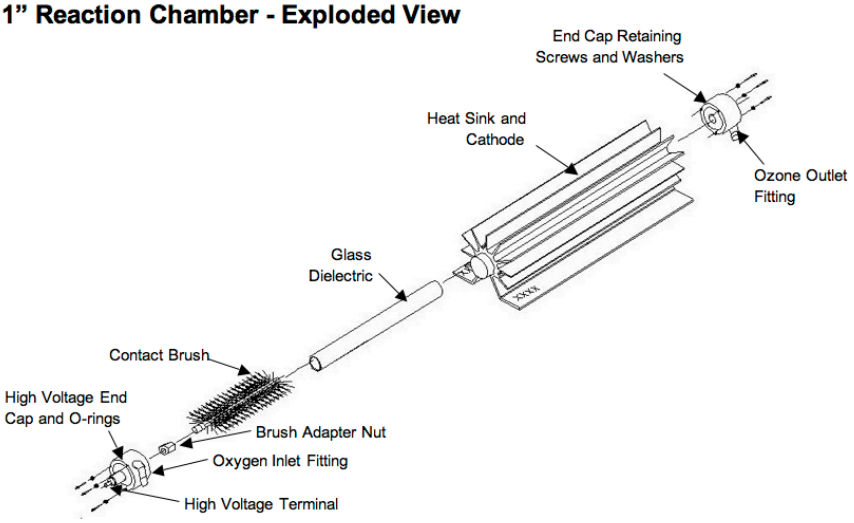

Miniseries Ozone Generator Troubleshooting

FOR USE WITH CD10, CD10/AD, CD12 & CD12/AD

Air dryer

CD10/AD and CD12/AD only.
The internal air dryer has two heating elements, a solenoid valve and a circuit board that controls its operation. The heating elements and the controls of the air dryer control board are rarely ever an issue.

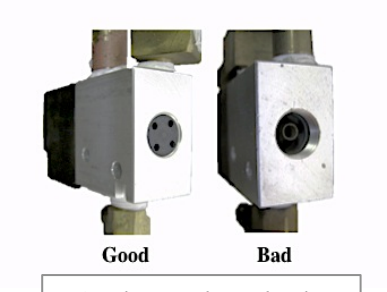

Air dryer solenoid valve

- The solenoid valve can visually be inspected to see if is compromised. The aluminum section of the solenoid valve, it will be pointed towards you, should have a black plug installed into it. If it has broken free, along with the spring, the solenoid valve will require replacement.

- The heating elements' health can be verified with an Ohms resistance check
  - Good: 130-160 Ohms resistance
  - Bad: Short or open connection

Optional steps, as there is rarely an issue with these components:

The timing and physical triggers of the solenoid valve and heating elements can be manually confirmed.

When first powered up, one air dryer chamber should be heated after a few minutes of operation. If you are testing by touch, tap your finger on the air dryer cylinder; do not touch it for longer than a brief moment. One chamber will be hot, the other cold.

Depending on the version of the dryer board, the length of time between switching voltage to the other heating element and the triggering of the solenoid can vary between 1.5 and 3 hours. At any one point, one cylinder will be very hot and the other cool (or warm if still cooling).

The LED indicators on the front cover showing "Dryer 1" and "Dryer 2" will indicate when they switch. There can be a 1.5 to 3 hour period between switches to allow for one chamber to cool before it is used. The "Air Prep" light will continuously blink to indicate the timing sequence is in process.
To confirm operation faster than the normal speed, you can temporarily add a jumper to the air dryer board's jumper connection to accelerate the timing sequence to roughly 20-30 minutes between switches. The variance of timing is the result of multiple versions of air dryer control boards.

If we find the timing sequence is off or the heating elements never get hot despite them passing an Ohms resistance test, replace the air dryer board (lowest of the three expansion board installed in motherboard).

Once we are satisfied the air dryer itself is functional, perform the regular maintenance steps to replace the air dryer media, indicating silica media and likely the inline particulate filter (which also changed color). Consult the manual for the steps.

Part numbers:
SV220 - Solenoid valve for CD10/AD & CD12/AD, 24VDC
ADP20 - Heating element for air dryer
CCA1232SA - Control board / Air dryer board - CD12/AD
ELPC5020SA - Air dryer board - CD10/AD
ADP100 - Replacement air dryer assembly for CD10/AD
ADP203 - Replacement air dryer assembly for CD12/AD

Cooling fan

The cooling fan installed in the lower-left of the ozone generator should always spin and blow air up into the ozone generator when the system is powered and turned on.

If there is a grinding noise or the fan is slow or erratic in movement speed, replace the cooling fan.

Part number:
FA47 - Cooling fan for Miniseries system, 4" 24VDC

Vacuum break

The vacuum break assembly should be inspected to insure there is water present within the lower half of the assembly, and no air bubbles within the water. See the *Notes on the vacuum break* in the *Gauges* section of this guide.

CD10/AD Air Dryer Function Diagram

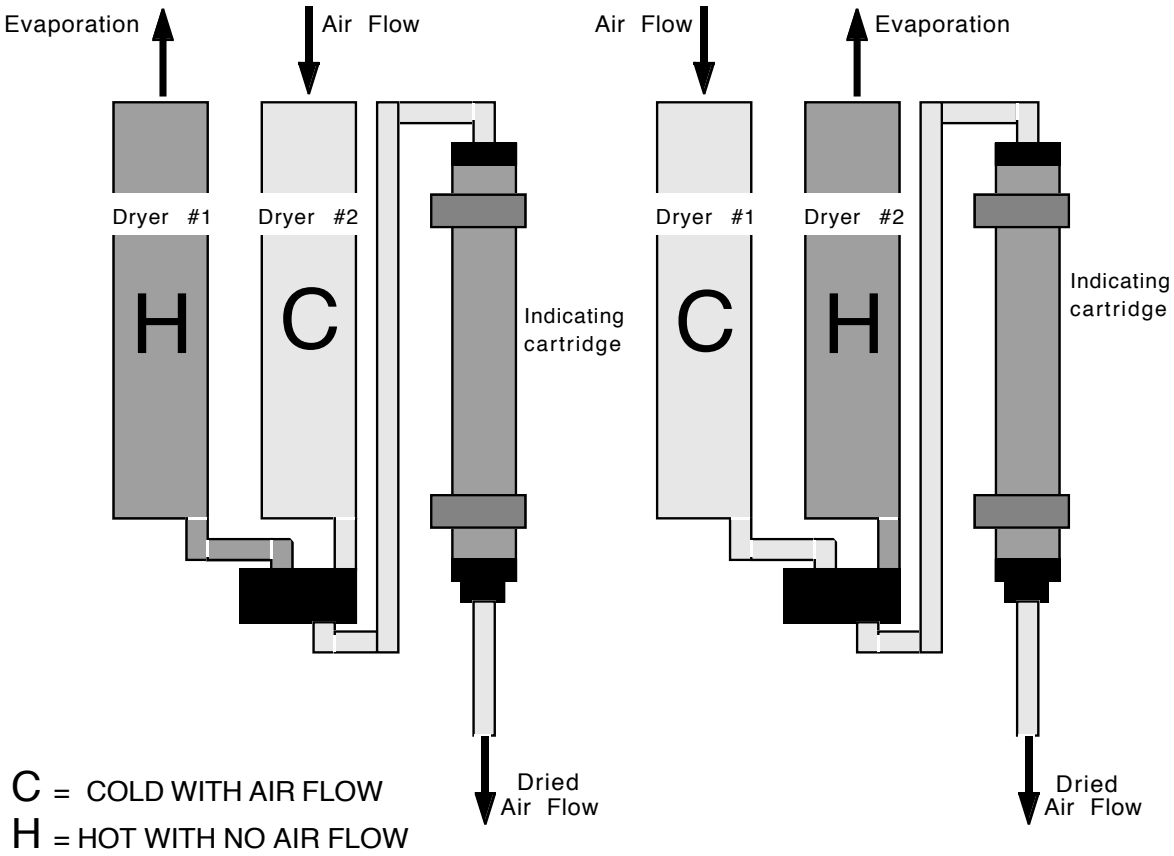

The CD10/AD heat regenerative air dryer system dries ambient air. This system requires continous power to operate properly. Vacuum drawn on this air dryer should not exceed 10 hours in a 24 hour period.

As the air travels through the dryer chamber the sieve traps the moisture from the air and allows the oxygen to pass into the ozone reaction chamber. The heat generated by the heater rods inside the dryer chamber evaporate the moisture that has been trapped in the sieve beds. That evaporation then expels off the top of the sieve bed.

The two dryer chambers and attached 3-way solenoid valve operate on a timed sequence. Dryer #1 heats first while the solenoid is energized allowing the vacuum from the venturi to draw air flow through Dryer #2. During this 2 1/2 hour cycle the Air Prep LED will flash and Dryer #1 LED will be lit continously. After 2 1/2 hours there is a 1/2 hour cool down cycle that will shut down Dryer #1 and its LED. **Note:** The air prep LED will remain flashing.

After the cool down cycle Dryer #2 will heat, the solenoid valve will denergize allowing the vacuum from the venturi to draw air flow through Dryer #1. During this 2 1/2 hour cycle the Air Prep LED will flash and Dryer #2 LED will be lit continuosly. After 2 1/2 hours there is a 1/2 hour cool down cycle that will shut down Dryer #2 and its LED. **Note:** The air prep LED will remain flashing.

Aerous Troubleshooting Guide

FOR AEROUS 8 & 15 OXYGEN CONCENTRATORS

System Operation

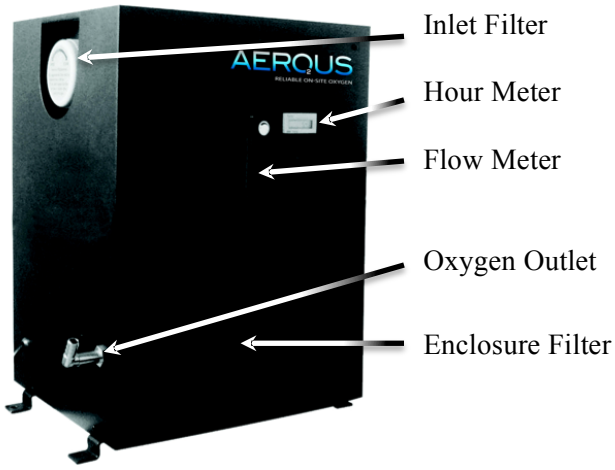

The AEROUS Oxygen Concentrator is a PSA (pressure swing adsorption) system. The system operation begins with ambient air being drawn in through the compressor air inlet filter. The air is then compressed and pressurized before being delivered to the sieve beds. The sieve beds trap most of the moisture and nitrogen allowing the oxygen to pass through. This oxygen is concentrated in the sieve beds where some of the pressure created by the compressor delivers oxygen out of the system at 90-93%.

The remaining pressure is used in the sieve bed recovery cycle. In the recovery cycle the residual pressure continually purges the sieve beds of the moisture and nitrogen. The solenoid valve opens allowing one of the sieve beds to dispense oxygen to use, while the other sieve bed is depressurized in the recovery cycle expelling moisture and nitrogen in a vapor form to waste.

If the recovery cycle fails, the sieve beds can become saturated. This will cause backpressure to the compressor, which will cause the compressor pressure relief valve (PRV) to relieve air.

Environmental and Installation Parameters

Model	Maximum output
Aerous 8	8SCFH at 10PSI
Aerous 15	15SCFH at 10PSI

Airflow rate – The maximum airflow rate should not be exceeded on the oxygen concentrators. The flow meter installed on the front cover displays the airflow in Standard Cubic Feet per Hour (SCFH). Operating below (or at zero) recommended airflow does not harm the system.

Replace filters regularly – Replace the inlet filter twice a year, and enclosure filter once a year. Clean or replace more often if the environment requires it. A video showing this can be found at: http://youtu.be/4XtMSS1_rFY

Temperature – If the ambient temperature is regularly above 85 F, this will affect the longevity of the unit. To reduce the effect, the two back covers can be removed (exposing the compressor). This will reduce the internal temperature of the concentrator. *Note: This should only be done if the environment is relatively clean, dry and indoor is ideal.*

Humidity – Installations where the ambient humidity is above 95% RH condensing, a coalescing filter with auto-drain will need to be used. An Aerous 15 High Humidity version is available.

Vacuum draw through Aerous while unpowered – At no time should a vacuum be drawn through the oxygen concentrator. In a standard ozone system installation a vacuum created by a venturi is used to draw ozone gas into the water line. If this vacuum is drawn while the oxygen concentrator is 'OFF', the sieve beds will trap the moisture and nitrogen in the same fashion. However, because the compressor and solenoid valve is not 'ON', the sieve beds cannot be purged of the adsorbed moisture and nitrogen. This will saturate the sieve beds, causing failure.

Troubleshooting

When troubleshooting an oxygen concentrator, the best tool is an oxygen meter to confirm if a system is functioning or not. When operating properly, the system should produce 90-93% oxygen.

If a meter is unavailable, the indicating media (silica gel) within the inline particulate filter of the ozone generator can be observed. When the oxygen concentrator is not functioning properly, the media will turn from blue, to pink or white. This process may take a day of operation.

Inline particulate filters
The original blue and two colors that indicate a nonfunctioning oxygen concentrator

Aerous Troubleshooting Guide

FOR AEROUS 8 & 15 OXYGEN CONCENTRATORS

Possible symptoms:

No Power LED / Won't Turn On

Zero / Low / High / Erratic Pressure or Flow Rate

Odd Noises (usually coupled with erratic pressure or flow rate)

Aerous 8 with front panel removed
-Orientation of components different within Aerous 15 oxygen concentrator

No Power LED / Won't Turn On

First, verify power is being delivered to the unit. If there is no power backtrack to the power source and troubleshoot it. The trouble-shooting will likely not involve the oxygen concentrator, except that if a venturi injector is involved and vacuum has been applied to the oxygen concentrator while it has been unpowered (or compressor offline), it can saturate the sieve chambers.

- Check the 10A Fuse - it is within a white fuse holder connected to the incoming power cord.
  - If the fuse is blown, replace it to see if it resolves the issue (random fuse pop). If the replacement fuse pops it is likely the control board shorting out, replace it.
- Power is delivered to the unit, and the fuse is intact, you will likely find power is delivered to half of the terminal block (see wiring diagram); but power is not being rebounded back from the control board relay to power the rest of the terminal block.
  - Replace the control board.

Zero / Low / High / Erratic Pressure or Flow Rate

This is the typical issue with these units and can be caused by a number of possibilities: Failing/failed compressor, disconnected tubing or leak at a fitting, malfunctioning solenoid valves, loose wiring on the solenoid valves, saturated sieve chambers, or an incorrectly set pressure regulator on the storage tank. Testing the output of the solenoid valve test can narrow these possibilities down.

Solenoid Valve Operation Test - A video showing this test can be found at: http://youtu.be/AzFju88WWaA

- Disconnect power from the unit and remove the screws from the front cover and angle it aside, there is no need to disconnect anything from the inside of the cover.
- Disconnect the two large tubing connections from the underside of both sieve bed chambers.
- Power the system and observe the air flow as it comes out of the two tubes.
- Air should flow in a pattern; it will flow out of one tube for ~8 seconds, then out both tubes, then switch to the other tube for 8 seconds. The cycle is then repeated. Two LEDs on the control board illuminate when a solenoid valve is opened, use the lights to confirm the pattern. Stop the airflow with your fingers and confirm the pressure relief valve in the back of the unit vents air (loud noise).
  - If the solenoid valves are routing air correctly and the pressure relief valve vented properly, this confirms that everything in the back half of the oxygen concentrator is likely fine.
  - If airflow never, or continuously, flows out of one tube then the solenoid valve is not functioning.
    - Check the four wires connecting to the solenoid valve assembly for bad connections. To check to see if they are wired properly: Hold the ribbon flat and insure that no wires cross each other when connecting to the terminals.
    - If the solenoid valve is wired properly and there are no loose connections, replace the solenoid valve assembly and the two sieve chambers (as they are likely compromised). A video overviewing replacement of the solenoid valve can be found at: http://youtu.be/AjeaGRDo02w
  - If there is no airflow out either tubing, open the back two plates of the oxygen concentrator to expose the compressor.
    - Confirm the cooling fan above the compressor is spinning, replace if not.

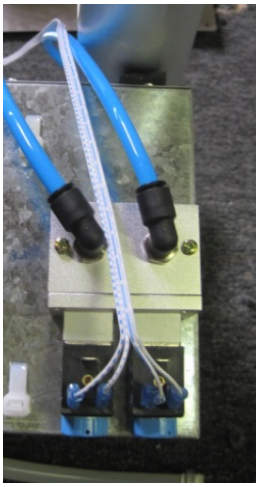

Solenoid valve assembly in Aerous 8, top view
-Orientation is reversed in Aerous 15

- Confirm the compressor is operating; replace the starter capacitor if it is not. If it is still not starting up, replace the compressor.
  - If the compressor is operating: Verify the tubing between the compressor and underside of the solenoid valve is not disconnected. If it is disconnected, or if you wish to reinforce this component, replace the compressor output tubing and compression fittings.

- Check for a leak on the front side of the system: Reconnect the tubing to the underside of the sieve chambers, and disconnect the braided tubing from the external side of the unit. Power the system so it blows out oxygen to ambient air. Open the gauge on the front cover to raise the ball to at least 8SCFH. Finally close off the outlet oxygen flow with your finger, and confirm the airflow gauge on the front panel drops to zero.
  - If the ball still floats at a number, there is likely a leak at tubing connection at the upper slot on the airflow gauge. Remove the tubing, cut off the end and reconnect it. Use a zip tie to secure the connection point.
  - If the ball drops to zero, there is no leak between the gauge and output fitting. Check for oxygen output with a meter or run the airflow through indicating media for a day to check for moisture.
    - If the system is not concentrating oxygen, replace the sieve chambers. They have become saturated due to a clogged filter on the side of the unit, possibly vacuum from a venturi injector has been delivered to the oxygen concentrator while it has been powered down, or a simple failure of the sieve beds.
    - If the system is concentrating oxygen, examine the storage tank, regulator and the fittings for cracks or leaks. A length of tubing held to your ear and used like a stethoscope is a fast method for finding leaking fittings.
      - If no leaks are detected, pull apart the pressure regulator on the small storage tank (follow the white tubing from the gauge in the front panel). It is likely the nut rotated off the thread within it. Reassemble the pressure regulator and adjust it to 10PSI (assuming the associated ozone generator requires pressure, which will provide the pressure gauge).

Odd Noise (usually coupled with odd pressure or flow rate)

This issue usually involves letting people know the unit does normally vent air internally, almost continuously. It is a long, low, whooshing noise in a repeating cycle. This is the sound of the recovery cycle of the oxygen concentrator.

Another noise can be a sharp hissing or popping, which can be the pressure relief valve of the compressor. This will likely give you low airflow and pressure, and the system will likely not be concentrating oxygen.

Confirm the solenoid valve is operating properly and follow the troubleshooting steps.

Replacement of the pressure relief valve is recommended if it has been actuating continuously.

The other possible noises involve the compressor that can start squeaking as it gets old (15000 hours+), or if one of the four mounts has become loose, and the compressor will rattle against the chassis.

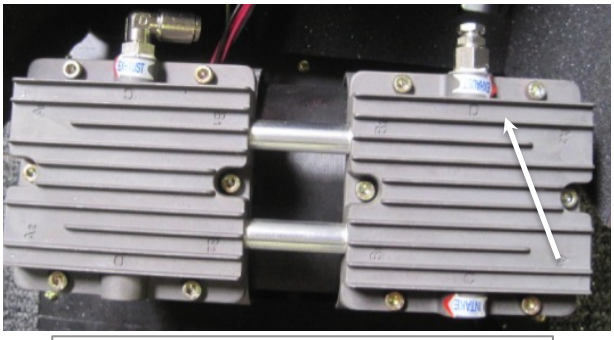

Compressor in Aerous 8, top view
-Orientation is reversed in Aerous 15
-Pressure relief valve indicated by arrow

Aerous Troubleshooting Guide

FOR AEROUS 8 & 15 OXYGEN CONCENTRATORS

Part #	Description
CMT200	OXYGEN MONITOR, HANDHELD - MINI OX I
CMT201	OXYGEN SENSOR HEAD - MINI OX I
FLT34	INLINE PARTICULATE FILTER
ASP70A	MAINT KIT - AEROUS 8 - FILTERS
ASP71A	REBUILD KIT - AEROUS 8 - SIEVES, SOLENOID & FILTERS
ASP75A	MAINT KIT - AEROUS 15 - FILTERS
ASP76A	REBUILD KIT - AEROUS 15 - SIEVES, SOLENOID & FILTERS
OXU350	ENCLOSURE FILTER - AEROUS 8
OXU351	ENCLOSURE FILTER - AEROUS 15
OXU371	INLET FILTER PACKAGE - AEROUS 8 & 15
FUS25	FUSE 10AMP SLOW BLOW
OXU375	SIEVE BED (SINGLE) - AEROUS 8
OXU381	SIEVE BED (SINGLE) - AEROUS 15
OXU379	SOLENOID VALVE ASSEMBLY - AEROUS 8 & 15
OXU385	CABLE, SOLENOID - AEROUS 8 & 15
OXU373	COMPRESSOR - AEROUS 8 120V 60HZ
OXU374	COMPRESSOR - AEROUS 8 220/240V 50/60HZ
OXU340	COMPRESSOR - AEROUS 15 120V 60HZ
OXU345	COMPRESSOR - AEROUS 15 220/240 50/60HZ
OXU346	COMPRESSOR MOUNT REPLACEMENT KIT
OXU348	STARTER CAPACITOR FOR COMPRESOR - AEROUS 8 & 15
FA41	COOLING FAN - AEROUS 8 120V 60HZ
FA42	COOLING FAN - AEROUS 8 220V 50/60HZ
FAN20	COOLING FAN - AEROUS 15 120V 60HZ
FAN21	COOLING FAN - AEROUS 15 220V 50/60HZ
OXU387	OXYGEN OUTLET REPLACEMENT FITTINGS - AEROUS 8 & 15
OXS362	PRESSURE RELIEF VALVE - AEROUS 8 & 15 - 45PSI
OXU388	COMPRESSOR OUTLET FITTING & TUBING REPLACEMENT - AEROUS 8
OXU389	COMPRESSOR OUTLET FITTING & TUBING REPLACEMENT - AEROUS 15
OXU380	PRESSURE REGULATOR - AEROUS 8 & 15
OXU384	OUTPUT STORAGE TANK WITH REGULATOR - AEROUS 8 & 15
OXU372	CONTROL BOARD - AEROUS 8 120V 60Hz
OXU386	CONTROL BOARD - AEROUS 8 220/240V
OXU377	CONTROL BOARD - AEROUS 15 120V 60HZ
OXU378	CONTROL BOARD - AEROUS 15 220/240V

- The maintenance kits include the inlet filter package (OXU371) and the appropriate enclosure filter (OXU350 or OXU351).
- Rebuild kits include the filters of the maintenance kit in addition to a solenoid valve assembly (OXU379) and two sieve beds (2x OXU375 or OXU381).
- The OXU371 inlet filter package contains the same two felt filters and foam spacer included with the original purchase of the Aerous oxygen concentrator.

SeQual Oxygen Concentrator Troubleshooting Guide

Oxygen Concentrator Components and Normal Operating Parameters

Oxygen Concentrator – Shown: Workhorse 8C

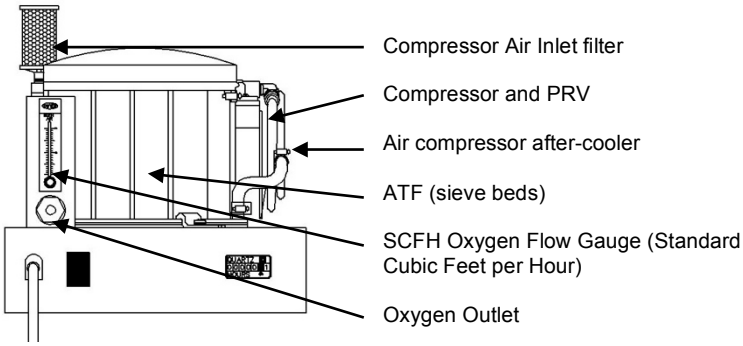

ATF – Advanced Technologies Factionator

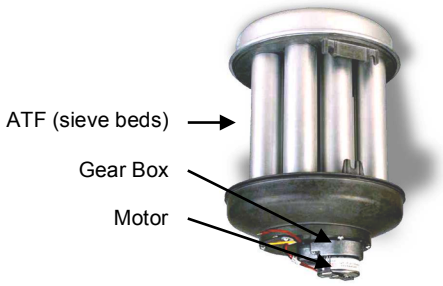

Normal Operating Parameters						
Product	**PRV Set Point (PRE 010106)**	**PRV Set Point (POST 010106)**	**Pre ATF PSI Swing**	**Post ATF PSI**	**Oxygen Output SCFH Flow Rate**	**Oxygen Output Percentage**
Workhorse 8c	35 PSI	45 PSI	17 to 19	5 to 7 PSI	8 SCFH	90% +3/-5%
Workhorse 12c	40 PSI	45 PSI	24 to 28	9 to 12 PSI	12 SCFH	90% +3/-5%
Workhorse 15c	35 PSI	45 PSI	17 to 19	5 to 7 PSI	15 SCFH	90% +3/-5%
Ambient Conditions: Temperature 40˚ to 95˚F, Humidity 0 to 95% RH non-condensing, Ambient Oxygen Level 20.0% minimum.						

System Operation

The SeQual Oxygen Concentrator is a PSA (pressure swing adsorption) system. The system operation begins with ambient air being drawn in through the compressor air inlet filter. The air is then compressed and pressurized through an after-cooler before being delivered to the ATF or sieve beds. Within the ATF, each of the 12 sieve beds trap most of the moisture and nitrogen allowing the oxygen to pass through. This oxygen is concentrated in the ATF where some of the pressure created by the compressor delivers oxygen out of the system at 90-93%. The remaining pressure is used in the ATF recovery cycle. In the recovery cycle the residual pressure continually purges the ATF of the moisture and nitrogen. The motor at the bottom of the ATF turns the gears in the gear box, which turns a disc within the ATF. This disc rotates allowing one third of the sieve beds to dispense oxygen to use, while the one third of the remaining sieve beds are depressurized in the recovery cycle expelling moisture and nitrogen in a vapor form to waste, and another third of the beds are equalizing. If the recovery cycle fails the sieve beds can become saturated. This will cause back pressure to the compressor, which will cause the compressor pressure relief valve (PRV) to relieve air. The PRV relieving air is typically an audible noise, anytime the PRV is relieving air the oxygen concentrator should be shut down and troubleshooting steps should be taken.

Setting System Air flow

All SeQual oxygen concentrators must be set to standard atmospheric pressure. This means, the oxygen SCFH flowmeter must be set ***without*** the oxygen delivery line connected, see the Normal Operating Parameters Chart for correct SCFH setting. **Note: Once the oxygen delivery line is connected the oxygen flow will drop from this set point due to back pressure through the system, this is normal, DO *NOT* READJUST THE SCFH FLOW METER. Warning: Failure to set the oxygen concentrator correctly will cause premature failure. Warranty will be VOID if this step is not completed correctly upon start-up.**

Testing Oxygen Purity

Using an oxygen meter, test the oxygen purity level. If the purity is found to be low further troubleshooting must be completed. If immediate troubleshooting cannot be done the system should be shut down until it is possible. Degradation level of the ATF can be found based on the level of oxygen purity, see chart below.

Oxygen Purity	88% +	40% - 87%	Below 40%
Action	ATF is in good condition, no action required	If no further issues are found, perform a recovery purge cycle	If no further issues are found, the ATF module may need to be replaced

Troubleshooting

Signs of Failure:

- Low oxygen output percentage
- Pressure relief valve relieving air or "Popping Off"
- If an Indicating cartridge color turns from blue and white to pink or all white, if so equipped

Note: These signs of failure can be directly related to the failure of the ATF module.

Possible Reasons for ATF Failures:

- Insufficient Power
- Compressor inlet filter is dirty
- Pressure relief valve has failed
- Compressor requires rebuild
- ATF Motor/Gear box not operating
- Ambient humidity above 95% RH or condensing
- SCFH oxygen flow not set properly
- Vacuum drawn through system with main power off
- Air leak in fittings or hose clamp not tight

Insufficient Power – SeQual Oxygen concentrators require correct input power, +/- 10% rated input voltage and correct cycle. If a low or high voltage or incorrect cycle is used this will cause the motors to turn slower or faster, which will cause insufficient air flows and pressure to be delivered to the ATF. Voltage outside specification can also cause the compressor to heat up, decreasing compressor life and decreasing oxygen concentration.

Compressor Inlet Filter is Dirty – The compressor inlet filter's suggested replacement period is every 4000 hours of operation. If the filter becomes dirty to the point at which insufficient air is drawn through, this will starve the compressor of air resulting in insufficient air flow and pressure to be delivered to the ATF. Because of insufficient air flow and pressure, the ATF will be unable to purge moisture and nitrogen sufficiently and become saturated.

Pressure Relief Valve has Failed – The PRV's suggested replacement period is every 8,500 to 12,000 hours of operation. Over time the PRV can wear causing it to leak. The PRV is an adjustable valve made up of a set-nut and a jam-nut. If the jam-nut is not tightened against the set-nut the vibration of the compressor can cause the set-nut to loosen, causing an air leak.

Setting the PRV:

- Tee a liquid PSI gauge between the compressor and PRV
- Loosen the jam-nut
- Apply power to oxygen concentrator
- Slowly apply back pressure on the compressor by kinking the air compressor delivery tubing to the ATF.
- As back pressure builds on the PSI gauge, listen for the air relief break point of the PRV
- Adjust the set-nut of the PRV until the correct air relief PSI break point is observed. See Normal Operating Parameters Chart above for the correct set point for the system.
- While holding the set-nut stationary tighten the jam-nut against the set-nut

Compressor Requires Rebuild - The compressor's suggested rebuild period is every 8,500 to 12,000 hours of operation. If the compressor requires rebuild or is rebuilt improperly, this may cause insufficient air flow and pressure to the ATF. Which will cause the ATF to insufficiently purge moisture and nitrogen and become saturated.

Air Leak in Fittings or Hose Clamp not Tight – If there is an air leak due to a loose fitting or hose clamp, this will cause insufficient air flow and pressure to the ATF. Which will cause the ATF to insufficiently purge moisture and nitrogen and become saturated. Tighten all fittings and hose clamps.

ATF Motor/Gear Box not Operating – The ATF motor/gear box assembly is a critical component to the oxygen concentrator. If this assembly is not operating it will cause the ATF to insufficiently purge moisture and nitrogen and saturate the ATF. To check the motor/gear box assembly operation, locate the spindle on the gear box. When the system is in normal operation this spindle will turn slowly. Make a mark on the spindle with a felt tipped ink pen to observe it turning. If the spindle is not turning replace the ATF motor/gear box assembly. Be sure to check oxygen purity as the sieve beds may already be saturated if the motor/gear box assembly is faulty.

Ambient Humidity Above 95%RH Condensing – All ambient air parameters must be met when using this equipment. Using the equipment outside the manufactures specifications may result in premature failure. In a condensing environment a coalescing filter with auto-drain must be used.

SCFH Oxygen Flow not Set Properly – As stated above, setting the oxygen concentrator to its specified SCFH at atmospheric pressure is a critical step in the set up of the system. If the oxygen flow rate is set above the rated specification for the system there will be insufficient back pressure to the ATF, which will cause the ATF to insufficiently purge moisture and nitrogen and become saturated. **Note: The oxygen flow rate may be set lower than the specified amount.**

Vacuum Draw through System with Main Power 'OFF' – At no time should a vacuum be drawn through the oxygen concentrator. In a standard ozone system installation a vacuum created by a venturi is used to draw ozone gas into the water line. If this vacuum is drawn while the oxygen concentrator is 'OFF' the sieve will trap the moisture and nitrogen in the same fashion. However, because the compressor and ATF motor/gear box assembly is not 'ON' the ATF cannot be purged of the adsorbed moisture and nitrogen, which will saturate the ATF causing it to fail.

Testing Pre ATF Pressure Swing:

If a visible failure cannot be found the Pre ATF pressure swing should be tested. Because the oxygen concentrator relies on this pressure swing any deviation of the normal operating swing parameters will help aide the trouble shooting process.

- Tee a liquid PSI gauge between the compressor and PRV or between the after-cooler and the ATF
- Apply power to oxygen concentrator
- Observe swing, see the Normal Operating Parameters Chart above.

Result	Possible Cause	Solution
Low Pre ATF Pressure Swing	- Compressor inlet filter is dirty - Compressor not operating properly - Leak in fitting or hose clamp not tight - PRV is relieving air	- Replace compressor inlet filter - Rebuild compressor heads - Tighten all fittings and hose clamps - Check PRV set point, replace as required
High Pre ATF Pressure Swing	- ATF motor/gear box is not operating properly - ATF is saturated with moisture and/or nitrogen. To be certain of saturation take a weight of the ATF module by itself. This weight can be checked against the original weight at the date of manufacturing.	- Replace ATF motor/gear box assembly if it is not operating. - Complete the steps below for the ATF Recovery Purge Cycle or replace the ATF as required.

ATF Recovery Purge Cycle:

If after all troubleshooting and testing has been completed and the ATF is found to be saturated, a recovery purge cycle of the ATF may return the ATF to normal operating status. However, the success of this recovery purge is dependent upon the saturation level of the ATF, see the "Oxygen Purity Chart" to decide if a recovery purge is relevant. The basis of this recovery purge is to allow 'all' of the pressure and air flow created by the compressor to purge the sieve beds to waste. Over time this recovery purge can clean the ATF sieve beds to the point of normal operational status.

To run the ATF recovery purge cycle, first test the oxygen purity level to create an oxygen purity starting point. Provide main power to the oxygen concentrator and close the oxygen output SCFH needle valve completely. The oxygen concentrator should be run for a minimum of 24 hours, and then oxygen purity should be tested again. If the oxygen purity level has increased to 88% or greater then the ATF has been recovered, if the oxygen purity level has increased though not up to 88%, run the recovery cycle for another 24 hours. As long as an increase in purity is observed after each 24 hour period the recovery cycle may be continued. If the oxygen purity level is not increasing after one or two attempts, then the ATF must be replaced.

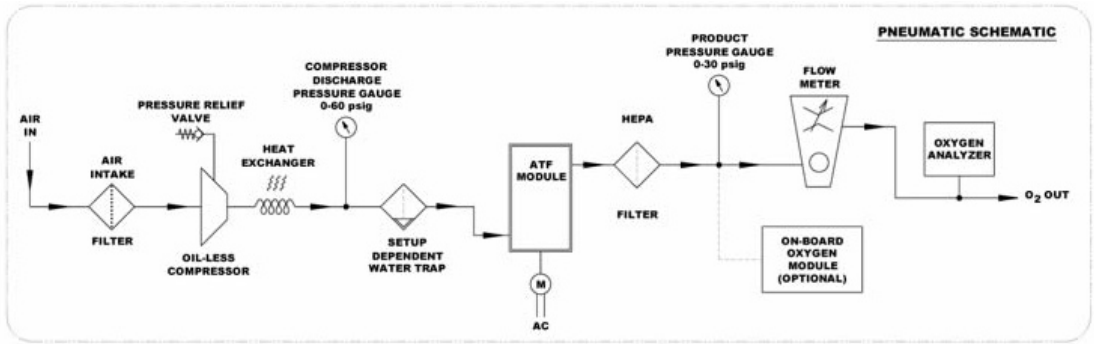

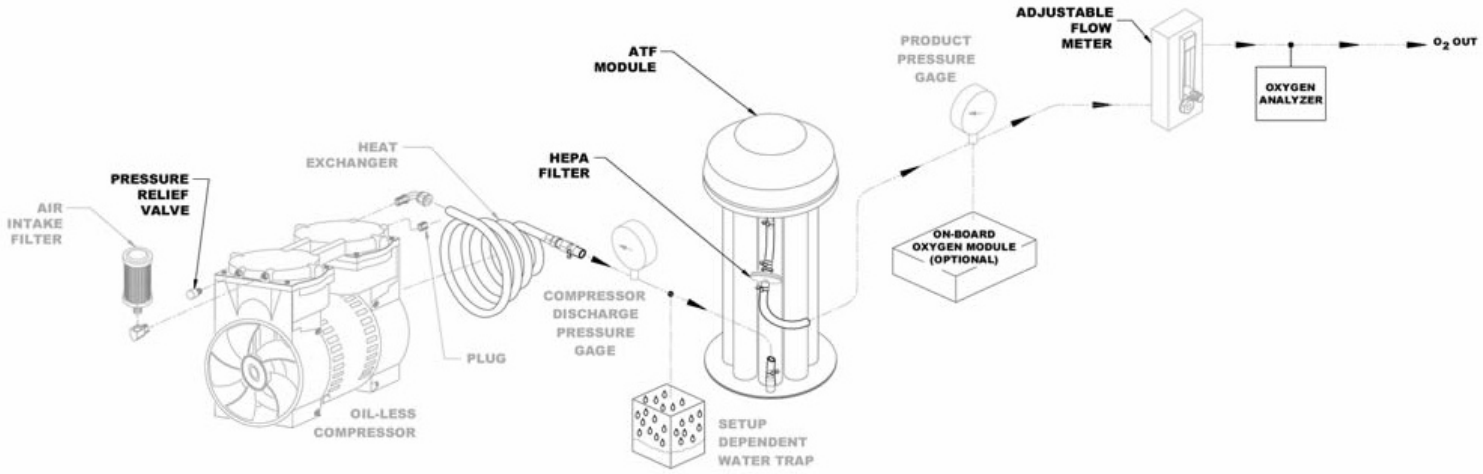

Microzone Troubleshooting & Maintenance Guide

Microzone 300 & 500 series

Troubleshooting

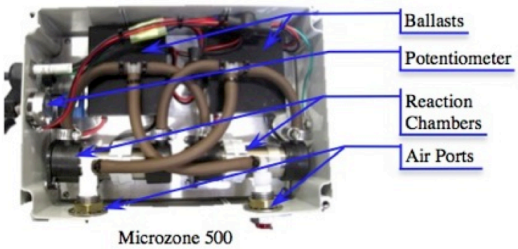

Microzone 500

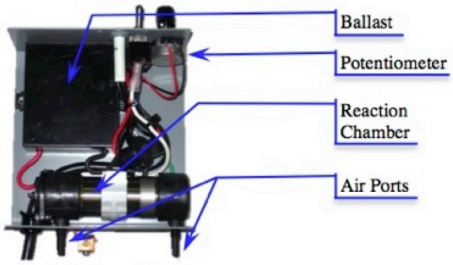

Microzone 300

Possible Symptoms:

- Suspected loss of ozone output
- Low water quality
- Loss of the bubbles typically seen in the water where the ozone is introduced.

In order for the ozone installation to be successful, we need two simple things to occur:

- Ozone must be produced
- The ozone must be delivered to the water

Troubleshooting the installation involves testing each of these necessities.

It is recommended to read the steps involved prior to performing them. Be aware that maintenance is recommended annually to maintain optimum output. Proceed to the "Maintenance" section for more information.

Testing of the Microzone 300 & 500 Ozone Output

Disconnect tubing and any filters that may be installed on one port of the ozone generator. Apply power and set the ozone output to maximum by turning the black potentiometer knob clockwise. Cup one hand around an empty air port and push air into the other port. It is expected that ozone gas will be expelled into your hand. Confirm the scent of ozone.

Note: Ozone has an overly sweet and cloying scent, commonly present around thundershowers and copy machines.

Do not breathe ozone directly into your lungs; simply smell your hand.

- If ozone is detected, skip down to the "Air Flow" section.
- If no ozone is detected, turn the black ozone output control knob from maximum to minimum and listen for the voltage arcing noise to decrease and increase appropriately.

If turning the ozone output knob up and down does nothing, meaning makes no sound, then:

- Replace the potentiometer (requires soldering). Refer to the pictures to obtain the part number of your version potentiometer.

Note: The potentiometer can be bypassed if the ozone output of the unit is run at 100% and output control is not needed. Solder/crimp a resistor between the two wired points on the potentiometer (see pictures). 250k ohms resistance between these points will equate to 100% output. The wattage of the resistor is not a factor. A 220k ohm resistor may be used, as they are more common.


ELRP5055 | ELRP5056 Current | Bypassed Potentiometer

If turning the ozone output knob up and down creates a change in sound, then:

- Rebuild or replace the reaction chamber(s). Replacement part number for one chamber is CD287. For rebuilding instructions see the "Maintenance" section.

Note: The ballast(s) of the Microzone series units rarely have failures. Voltage spikes are the only reason found to require replacement.

Regarding potentiometers:

Failures of older potentiometers are usually due to either a minor ozone leak or environmental damage. In newer units, we have reinforced this component by installing a sealed potentiometer and moving the on/off switch function to the silver toggle switch installed next to the new potentiometer. Pictured are the two versions of potentiometers. Upgrading to the current style will involve drilling and mounting the on/off toggle switch. Replacement of the unit with the current version, and harvesting the original unit for spare parts is a common choice when forced to replace the potentiometer.

Microzone Troubleshooting & Maintenance Guide

Microzone 300 & 500 series

Microzone 300 & 500 Airflow
There are two methods of introducing ozone to water: Suction with a venturi injector and Diffusion through a diffusion stone with a compressor. *Note:* If you are using the ozone generator to introduce ozone gas into the air, such as for deodorizing, you are using the diffusion method.

Testing Venturi Airflow:
We will check for two things, the presence of suction at the venturi and then confirm there are no air leaks in the tubing or unit. If there are any air leaks, ambient air enters the line replacing or diluting the ozone.

Disconnect the tubing at the injector and place your thumb over the injector fitting for 5 seconds. You're going to use the tactile suction present to give you a baseline level of suction. After reconnecting tubing to the injector, disconnect it from the next connection point and compare the level of suction found to that present at the injector. Continue checking for suction until suction has been confirmed between the venturi injector and all components, to the ozone generator's air inlet fitting.
Replace the components found to be leaking.
Note: When confirming suction, press your finger over the line for 5 seconds at each testing point. It should hold suction the entire time. If a leak has occurred, the suction will be present initially, but will fade as the leak is drawn through.

If no suction is detected at the venturi injector:
- Adjust the injector bypass valve to route more water through the injector
- Confirm the water pump is operational and not cavitated.
- Remove the check valve at the injector (slowly) to see if it is clogged and may require replacement. CWT part # CKV60
- Check for blockages downstream which would cause excessive backpressure
- Examine the suction port of the injector for debris physically blocking the port

Testing Diffusion Airflow
Symptom – "No bubbles in water" In diffusion setups, we're testing for two things, the compressor pressurizing air and confirming there are no leaks between the compressor and to the point of delivery.

Disconnect power from the ozone generator; there is no need to generate ozone for these tests.
Disconnect tubing from the output of your air compressor (usually a quality aquarium pump), power the compressor and confirm air is being pressurized.
Note: The Microzone 300 & 500 do not have internal compressors. If the diffusion method is being used a compressor has been purchased along with the ozone generator or added after installation.
To extend the longevity of the pump, please see the "Maintenance" section.

If no pressure is detected at the compressor outlet: Replace/rebuild the compressor.
If pressure is detected, reconnect the tubing. Perform the same test, checking for pressurized airflow at each tubing connection, checking for leaks. Replace components found to be leaking.

If the leak is found at the reaction chamber(s) due to the glass being pushed out of the chamber housing, see "Rebuilding the Reaction Chamber" section for instructions on how to reinstall the glass. This issue is caused by excessive pressure being delivered to the reaction chambers. Do not exceed the maximum pressure of 5 PSI. The ideal range is 3 PSI. Clogged diffusion stones can increase the pressure, see "Maintenance".

Maintenance of Microzone 300 & 500
In order to maintain optimum output and longevity, preventative annual maintenance is recommended.
Replace the following annually:
- Check valve CWT Part #: CKV60
- Filter (Used in Microzone 500) CWT Part #: FLT34
- Diffusion stone: CWT Part #:DIF12
  Alternatively, the diffusion stone can be cleaned. Soak overnight in a 50% solution of muriatic acid and rinse.
- Reaction chamber(s) CWT Part #: CD287
  Alternatively, the reaction chamber can be rebuilt, assuming no components are broken.

Note about reaction chambers:
*C*ompaction of media within the reaction chamber will occur after an extended time, typically 1-3 years depending on usage. Ozone output is reduced while it is in this state. For this reason, we recommend replacing or rebuilding the reaction chamber annually.

Rebuilding the Reaction Chamber
Rebuilding the reaction chamber is delicate work, but easy to master. It is recommended to have a replacement reaction chamber on hand when performing a rebuild, as the glass within may be broken.

You will need a Phillips head screwdriver, (needle-nose) pliers, sheet of paper / paper plate, denatured alcohol, shop towel for cleaning. A ½" drill bit is recommended.

To begin, you will need unplug the unit from its power source and remove the cover. Then remove reaction chamber from its stabilizing clips and wires. Once the reaction chamber is removed, continue with the chamber rebuild steps below.

Step 1: Remove the test tube-like glass from the cathode chamber housing by removing the outer retaining nuts/screws on high voltage end. This glass tube should slide out easily.
Note: if the glass is broken or cracked upon removal, replace entire reaction chamber and ignore remaining steps.

Step 2: Extract the rubber plunger by unscrewing the nut that secures the anode post (threaded screw without a head) and, using a pair of pliers, pull it straight out of the glass tube.
Note: Any sideways movement may break the glass.

Step 3: Dump the loose media into a square container or paper plate. The remaining media will be media tightly packed within the tube.

Step 4: To remove the remaining media, run a powered drill bit, slightly smaller than the tube itself, through the media in a slow and controlled manner to work out the media.
Note: This method is preferred compared to chipping out the media, as it does not involve contact with the glass, limiting breakage.

Step 5: Once the media is removed, and broken down to no longer be tightly packed, it can be poured back into the tube
Note: You will likely not be able to fit all the media back into the tube, save or discard the excess.

Step 6: Press the rubber plug back in slowly, avoiding any sideways movement. Secure the nut on threaded screw, clean the exterior of the glass tube with denatured alcohol and reassemble.

ClearWater Tech. LLC.

System Commissioning

* Overview

• Observe equipment room
- Proper ventilation
- Sufficient air turn over
- Clean area that will not clog filters
- Equipment is not subject to weathering conditions
- Equipment is not subject to potential failure due to effects of surrounding equipment

• Observe proper mechanical installation
- Inspect equipment for shipping damage
- Equipment is mounted properly
- All electrical panels, doors and covers are easily accessible
- Equipment is easily accessible for future maintenance
- All meters, light, switches and gauges should be visible and accessible

• Observe Hydraulics
- Size of pipe for installation
- Contact tank(s) plumbed correctly
- Injector Manifolds plumbed correctly
- Ozone injection located upstream of residual sanitizer
- pH control feeder place downstream of residual sanitizer
- ORP probe location on suction side of main return pump
- Inspect for back pressure possibilities
- Insure proper back flow prevention devices
- Observe isolation valves and bypass loops for maintenance purposes
- Observe filtration to ozone loop as required

• Observe Electrical
- Insure proper electrical hook ups of equipment
- Insure the use of a "true neutral" when required (not a floating neutral)
- Equipment is placed as close as possible to the point of injection (20' max)
- Insure constant power to equipment that requires it
- Insure proper rotation of 3 Phase pumps
- Insure proper position of voltage selector switch(es)

• Observe Pneumatics
- Sufficient tubing lengths
- No kinks
- Connectors and hose clamps tight
- Water in vacuum break

* Start-up and Calibration

• Hydraulics
- Flow through ozone loop
- Check for vacuum on venturi

• Heat Regenerative Air dryer

- Dryers are heating and cycling

• Oxygen Concentrators and LPSA Dry Air
- All packaging material has been removed
- Compressor inlet filter is installed
- SCFH set at atmospheric pressure (not connected to ozone generator). The SCFH set must not exceed the output of the unit used, ie: Workhorse 15C, 15 SCFH max.

• Ozone Generator
- Turn on system
- Observe cooling fan(s) on
- Observe all main power lights for operation
- Observe all drive modules LED's for operation
- Insure proper position of the On/Off/Auto or Variable/Bypass/4-20mA switch(es)
- Set SCFH and adjust vacuum

• Vacuum Break
- Bubbles must not be present

• Ozone Destruct System
- Adjust ball valve on water trap as required
- Insure Off Gas Destruct is heating
- Insure ozone off gas is not present in the ambient air

• Over Vacuum Relief Valve
- Insure valve is opening (use an instrument for initial break of valve)
- Valve arrow must be in the direction of ozone gas flow
- Insure there are no obstructions of the valve

* Final
- Overlook installation

* Training
- Train on sight staff of operation of equipment and preventative maintenance

Serial Number of Equipment:_____

Model of Equipment:_____

Job Name:_____

Job Location:_____

Job Contact:_____

Commissioning Provided By:_____ Date: _____
Signature

Commissioning Approved By:_____ Date:_____
Signature

Service Contract

Agreement made this _____ day of _____, 20__, between _____, hereinafter First Party, and _____, hereinafter Second Party.

The parties to this agreement, in consideration of the mutual covenants and stipulations set out, agree as follows:

Both parties agree to a maintenance contract for the period of ____ to ____ . The cost of _____, due the 1st day of the month, paid to the first party, for the maximum of one (1) hour labor per month, with equipment to inspect, adjust, clean filters and make minor repairs as required to the following systems:_____, system electronic controllers, contact tank/relief valves, filter tank/relief valves, control valves, compressors/ filters, cooling radiators, recirculating pump/ filter basket, poly tank floating valves and mazzie venturi installed on the site of the second party. Additional labor time of the first party to be billed at $_____per hour and paid on terms of net 30. Any and all additional parts, charged at wholesale, to be invoiced and paid on terms of net 30. Plus, once in a 12 month period a total of eight (8) hours of labor of the first party for general maintenance on the site of the installation of the _____, to be billed at $_____ per hour plus parts and paid on terms of net 30.

SECTION I
INSTRUMENT AS ENTIRE AGREEMENT

This instrument contains the entire agreement between the parties, and no statements, promises, or inducements made by either party or agent of either party that are not contained in this contract shall be valid or binding; this contract may not be enlarged, modified, or altered except in writing signed by both parties and endorsed on this agreement.

SECTION II
EFFECT OF AGREEMENT

This agreement shall inure to the benefit of and be binding on the heirs, executors, assignees, and successors of the prospective parties.

IN WITNESS WHEREOF, the parties have executed this agreement on the day and year first above written.

_____	_____
Signature of First Party	Signature of Second Party
_____	_____
Print Name of First Party	Print Name of Second Party
_____	_____
Address of First Party	Address of Second Party

ClearWater Tech, LLC Limited One-Year Warranty

Summary of the Warranty

ClearWater Tech, LLC ("CWT") makes every effort to assure that its products meet high quality and durability standards and warrants the products it manufactures against defects in materials and workmanship for a period of one (1) year, commencing on the date of original shipment from CWT, with the following exceptions: 1) The warranty period shall begin on the installation date if the installation is performed within 90 days of the original shipment from CWT; 2) The warranty period shall begin on the date of the bill of sale to the end user if the installation date is more 90 days after the original shipment date. To validate the warranty, a warranty card, accompanied by a copy of the bill of sale, must be returned to CWT and must include the following information:

- End user name
- Complete address, including telephone number
- Date installed
- Complete model and serial number information
- Name of company from which the unit was purchased

Repairs and replacement parts provided under this warranty shall carry only the unexpired portion of this warranty or 90 days, whichever is longer.

Items Excluded from the Warranty

This warranty does not extend to any product and/or part from which the factory assigned serial number has been removed or which has been damaged or rendered defective as a result of:

- an accident, misuse, alteration or abuse
- an act of God such as flood, earthquake, hurricane, lightning or other disaster resulting only from the forces of nature
- normal wear and tear
- operation outside the usage parameters stated in the product user's manual
- use of parts not sold by CWT
- service or unit modification not authorized by CWT
- check valve/solenoid valve failure
- damage which may occur during shipping
- failure to meet service requirements as outlined in the I & O manual

Obtaining Service Under the Warranty

Any product and/or part not performing satisfactorily may be returned to CWT for evaluation. A Return Goods Authorization (RGA) number must first be obtained by either calling or writing your local authorized dealer, distributor or CWT direct, prior to shipping the product. The problem experienced with the product and/or part must be clearly described. The RGA number must appear prominently on the exterior of the shipped box(es). The product and/or part must be packaged either in its original packing material or in comparable and suitable packing material, if the original is not available. You are responsible for paying shipping charges to CWT and for any damages to the product and/or part that may occur during shipment. It is recommended that you insure the shipment for the amount you originally paid for the product and/or part.

If, after the product and/or part is returned prepaid and evaluated by CWT, it proves to be defective while under warranty, CWT will, at its election, either repair or replace the defective product and/or part and will return ship at lowest cost transportation prepaid to you **except for shipments going outside the 50 states of the United States of America.** If upon inspection, it is determined that there is no defect or that the damage to the product and/or part resulted from causes not within the scope of this limited warranty, then you must bear the cost of repair or replacement of damaged product and/or part and all return freight charges. Any unauthorized attempt by the end user to repair CWT manufactured products without prior permission shall void any and all warranties. For service, contact your authorized dealer or distributor or CWT direct at (805) 549-9724, extension 23.

Exclusive Warranty

There is no other expressed warranty on CWT products and/or parts. Neither this warranty, or any other warranty, expressed or implied, including any implied warranties or merchantability of fitness, shall extend beyond the warranty period. Some states do not allow limitations on how long an implied warranty lasts, so that the above limitation or exclusion may not apply to you.

Disclaimer of Incidental and Consequential Damages

No responsibility is assumed for any incidental or consequential damages; this includes any damage to another product or products resulting from such a defect. Some states do not allow the exclusion or limitation of incidental or consequential damages, so that above limitation or exclusion may not apply to you.

Legal Remedies of Purchaser

This warranty gives you specific legal rights and you may also have other rights which vary from state to state.

THIS STATEMENT OF WARRANTY SUPERSEDES ALL OTHERS PROVIDED TO YOU AT ANY PRIOR TIME.